County of Santa Clara

Department of Planning and Development
Planning Office

County Government Center, East Wing, 7th Floor
70 West Hedding Street
San Jose, California 95110-1705
(408) 299-5770 FAX (408) 288-9198
www.sccplanning.org

STAFF REPORT
Zoning Administration
May 2, 2019

Public Hearing Item #3

Staff Contact: Valerie Negrete
(408) 299-5791, Valerie.negrete@pln.sccgov.org

File: 11471-18ASA-18G (Los Altos Country Club) Architecture and Site Approval, Grading Approval

Summary: Architecture and Site Approval (ASA) and Grading Approval (G) for the development of an approximate 15,000 square-foot Proshop. Grading of approximately 2,400 cubic yards of cut and 100 cubic yards of fill. Three (3) protected trees are proposed for removal, including two (2) 23" Olive trees and (1) 35" Deodar Cedar tree.

Owner: Los Altos Country Club
Applicant: Craig Almaleh, ArtTec
Lot Size: 6 acres
APN: 331-11-125
Supervisorial District: #5

Gen. Plan Designation: USA (Los Altos)
Zoning: R1-E-20-n1/A
Address: 1560 Country Club Dr, Los Altos
Present Land Use: Golf Course & Club

RECOMMENDED ACTIONS

A. Accept Categorical Exemptions, under Section 15302 (b) of the CEQA Guidelines, Attachment A.

B. Grant Architectural & Site Approval (ASA) and Grading Approval (G), subject to Conditions of Approval outlined in Attachment B.

ATTACHMENTS INCLUDED

Attachment A – Proposed CEQA Determination – Categorical Exemption
Attachment B – Proposed Conditions of Approval
Attachment C – Location & Vicinity Map
Attachment D – Proposed Plans
Attachment E – Proshop Exterior color

PROJECT DESCRIPTION

The proposed project includes the demolition of an existing 8,500 square-foot pro-shop, and the construction of a new 15,000 square-foot pro-shop with additional cart storage in the same general location. The footprint of the building follows the existing grade and building placement. The height of the proposed building at the north entrance is 21 feet, as measured from finished grade. As the grade slopes downward, the height increases to approximately 30 feet facing west towards the fairway.

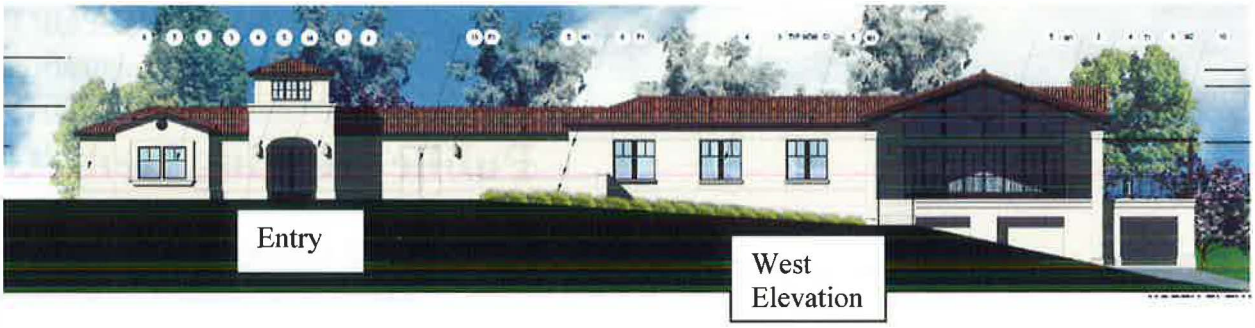

The property is a developed with a golf course and country club the proposed grading for underground golf cart storage and the building footprint includes 2,400 (c.y.) of cut and 100 (c.y.) of fill.

Three (3) protected trees are proposed for removal including two (2) 23" Olive trees and (1) 35" Deodar Cedar tree. In order to facilitate an indoor practice golf simulator, a larger area was needed which resulted in the need to remove trees within the footprint of the new Proshop. To assess tree removal impacts, an Arborist Report, prepared by Ned Patchett, was submitted, along with recommendations for replacement (discussed in ASA finding #3).

Setting/Location Information
The property is located over 800 feet south of the City of Los Altos boundary, within the unincorporated area of Santa Clara County. Surrounded by residential properties that are at least .25 acres in size, the site is served by the City of Los Altos for sewer connection and California Water Service Company for potable water service.

This project will not affect current use of the site as a Golf Course Country Club. No changes to parking, employees, traffic, or on-site capacity is proposed with this project.

REASONS FOR RECOMMENDATIONS

A. Environmental Review and Determination (CEQA)
The proposed project qualifies for a Categorical Exemption, pursuant to Section 15302(b) of the California Environmental Quality Act (CEQA) for "Replacement or Reconstruction" of existing structures and facilities. The new structure will be located on the same site as the existing structure and will have substantially the same purpose and capacity. The proposed Proshop will be located in the same footprint as the existing structure and will be increased slightly to accommodate the proposed indoor golf simulators. Grading associated with this development will follow the existing footprint and contours of the property. No additional activities are proposed with this development, and no additional memberships are requested with this project.

It should be noted that the project was originally noticed with "Use of Prior CEQA" as the form of meeting CEQA requirements. However, after the public notices were sent and the Agenda was published, Staff determined that the project qualifies as an exemption instead. This is due to the fact that the initial Mitigated Negative Declaration did not anticipate demolition of the subject structure.

B. Architectural and Site Approval (ASA)

The subject proposal requires an ASA as a building will be modified under the approved use permit. The Zoning Administrator may approve an Architecture and Site Approval application if able to make all applicable findings listed in §5.40.040 of the County Zoning Ordinance. Listed below are the individual findings in **bold**, with a discussion following in plain text.

1. **Adequate traffic safety, on-site circulation, parking and loading areas, and insignificant effect of the development on traffic movement in the area;**

   Traffic will not increase with this proposal. No increase in the number of visitor, member, or employee trips are proposed. Pursuant to the existing Use Permit, a total of 255 parking spaces are permitted on-site and no changes to personnel are proposed as part of this project. Adequate parking is provided on-site, and as required with the 2011 expansion project and Use Permit. As such, the project will not impact traffic levels beyond what was analyzed in the adopted Mitigated Negative Declaration. Temporary construction traffic will be conditioned to occur during permissible days and times, with construction parking only permitted on-site. (See Attachment B)

2. **Appearance of proposed site development and structures, including signs, will not be detrimental to the character of the surrounding neighborhood or zoning district;**

   The surrounding neighborhood is developed with rural residential properties. The existing Proshop is situated to southern-most area of the Country Club, approximately 200 feet from the main clubhouse, and over 30 feet from Loyola Drive. The overall height of the new Proshop is 21 feet, and the footprint is not proposed to change as a result of the proposed project.

   The existing Proshop is visible along Loyola Drive heading east. The view of the Proshop will be substantially the same, except for a slightly taller pitched roof. Existing vegetation along Loyola Drive, heading east, screens the majority of the building from view, and this vantage point will remain the same. The applicant is also proposing additional landscaping along Loyola Drive in order to further screen the building and provide for replacement of trees proposed for removal (See Finding #3 below).

   The existing Proshop is a Spanish Colonial Revival style structure with Spanish tile roofing, as were many of the other structures of the Country Club when they were built between 1924-1925. The Proshop is the last structure to be redeveloped and is proposed

to be re-built to emulate the original building. The original application proposed an exterior to be painted "High Reflective White". Due to the buildings location along Loyola Drive staff had concerns that the color was too bright. In response to staffs concerns, the applicant agreed to modify their proposal to "Divine White" which is more subtle white (See Attachment E).

After working with staff, the applicant provided additional features along the south elevation facing Loyola Drive to include wood windows, canvas awning and recessed building siding features to further break-up the aesthetic of the wall facing Loyola Drive. Existing hand carved wood pilasters are also proposed to be integrated along the new entry.

No new signs are proposed with this project.

3. **Appearance and continued maintenance of proposed landscaping will not be detrimental to the character of the surrounding neighborhood or zoning district;**

Additional landscaping is proposed along Loyola Drive and the east portion of the Proshop to further screen the new Proshop building. To assess protection and/removal impacts, the applicant submitted an Arborist Report. The report concluded that removal of a total of three (3) protected trees are necessary for the development of the Proshop, including one (1) 23" Olive; one (1) 35" Deodar Cedar; one (1) 20" Olive and one (1) unprotected 10" Crepe Myrtle. These trees are situated along the north portion of the proposed building. The Arborist recommended the following for tree replacement, which was found to be acceptable and compliant with County Ordinances:

Tree diameter (in inches)	Replacement	Tree to be Removed	Replacement
5-18	(3) 15 gallon or (2) 24-inch box trees	N/A	N/A
18-24	(4) 15 gallon or (3) 24-inch box trees	2 – (1-23" Olive tree & 1-20" Olive tree)	(6) – 24" box trees
24+	(5) 15 gallon or (4) 24-inch box trees	1-35" Deodar Cedar	(4) – 24" box trees
TOTAL TREE REPLACEMENT:			**(10) – 24" box trees**

As a condition of approval, and consistent with the Arborist Report, final landscaping plans will be required to indicate the exact location of tree replacement, at a minimum of ten (10) 24" box trees or larger native trees. Therefore, staff finds the proposal to be consistent with the character and surrounding area.

4. **No significant, unmitigated adverse public health, safety and environmental effects of proposed development;**

No additional members or operational changes are proposed with this project. The proposed structure will be situated in the same location as the existing and will conform to the applicable zoning standards. Proposed improvements would not result in new environmental impacts to traffic, noise, construction noise or air quality. The project was reviewed by County's Land Development Engineering Division, Department of Environmental Health, the Fire Marshalls' Office, and Roads and Airports and no issues related to health, safety or environmental effects were found to exist. The proposed structure will serve the same use as the existing and will have the same capacity.

5. **No adverse effect of the development on flood control, storm drainage, and surface water drainage;**

   The proposed project will not have any significant impact to flood control, storm drainage, and surface water drainage. The project has been reviewed by the County's Land Development Engineering Division. Site runoff is controlled by a bio retention area located adjacent to Loyola Drive. Runoff from the additional impervious surface is conditioned to be adequately managed and treated as required through the conditions of approval. Additionally, the project will incorporate required Best Management Practices (BMPs) during the construction process.

6. **Adequate existing and proposed fire protection improvements to serve the development;**

   The proposed project was reviewed by the County Fire Marshal and further conditioned to clearly show fire access to accommodate emergency vehicles. The parking lot to the northeast of the Proshop will provide emergency access for fire vehicles, with a new 26' access gate with safety knox box, and new curb to accommodate a fire turnaround. Prior to issuance of building permits for the Proshop, the applicant will be required to demonstrate fire protection measures and improvements are met, outlined in the Conditions of Approval (see Attachment B).

7. **No significant increase in noise levels;**

   The Driving range, which is used for golfers to practice, is situated along Loyola Drive. Noise from golfers hitting balls generate noise, however the noise is considered nominal. The proposed Proshop would bring driving range simulators indoors, which would eliminate the outdoor practice area for golfers hitting balls outside, near Loyola Drive. Furthermore, it is not anticipated that there would be any increase in the ambient noise levels that exist with the exiting Proshop, as a result of the newly constructed Proshop.

   In compliance with the County Noise Ordinance, construction will be limited to daytime hours. As an ongoing Condition of Approval, the project will be required to comply with County Noise Ordinance. As proposed, the project will not result in a significant increase in noise levels in the area.

8. **Conformance with zoning standards, unless such standards are expressly eligible for modification by the Zoning Administrator as specified in the Zoning Ordinance;**

The proposed project satisfies all of the required zoning standards, as stipulated in the County Zoning Ordinance. The zoning district for the subject golf course and country club parcel is R1-E-20-n1/A, and the area of the Proshop is zoned A, which requires minimum front, side and rear setbacks of 30, 30, and 30, respectively. The new Pro-shop will be situated 30 feet from the side property line along Loyola Drive. The maximum height for structures is 35 feet. As noted in the project description section of this report, the height of the new building will be 21 feet as measured from finished grade at the north entrance and increases to approximately 30 feet west towards the fairway. The project complies with the minimum required setbacks and is within the allowed height limits established for the zoning district. No proposed modification to these standards are requested.

9. **Conformance with the general plan and any applicable area or specific plan, or, where applicable, city general plan conformance for property located within a city's urban service area; and**

The property is located within the Urban Service Area of the City of Los Altos. The city's General Plan governs the subject site for use and density. Within the City of Los Altos this property's General Plan designation is Open Space with a pre-zoning of Public and Community Facilities (PCF). The project is in conformance with the County's General Plan as the property is approved to operate as a golf course and country club through an approved Use Permit. The site has operated as a country club and golf course since 1923.

10. **Substantial conformance with the adopted *"Guidelines for Architecture and Site Approval"* and any other applicable guidelines adopted by the County.**

The proposal will be required to adhere to all Conditions of Approval required by other agencies and the Zoning Administrator. The intent of the "*Guidelines for Architecture and Site Approval*" is to *"secure the general purposes of the zoning ordinance and the General Plan and to maintain the character and integrity of the neighborhood by promoting excellence of development, preventing undue traffic hazards or congestion, and encouraging the most appropriate development and use of land in harmony with the neighborhood."* The proposal is in harmony with the existing neighborhood as the building location and general scale is not changing. There would be no significant environmental effects on traffic, or congestion, or noise the proposal secures such general purposes.

C. **Grading Approval Findings:**

As the project includes a total of 2,400 c.y. of cut and 100 c.y. of fill, Grading Approval is required. Pursuant to Section C12-433, all Grading Approvals are subject to specific

findings. In the following discussion, the scope of review findings is listed in **bold**, and an explanation of how the project meets the required standard is in plain text below:

(a) The amount, design, location, and the nature of any proposed grading is necessary to establish or maintain a use presently permitted by law on the property.

The project includes 2,400 (c.y.) of cut and 100 (c.y.) of fill to primarily accommodate the underground golf cart storage, with a small portion for building improvements. The amount, design, location and the nature of proposed grading is necessary and appropriate to establish maintain adequete storgae of equipment, which is a permissible in accordance with the existing use permit (County File # 4P66.2 and 1427).

(b) The grading will not endanger public and/or private property, endanger public health and safety, will not result in excessive deposition of debris or soil sediments on any public right-of-way, or impair any spring or existing watercourse.

All proposed grading will be located on-site and will be engineered to ensure that the construction of the project will not endanger public and/or private property, and will maintain the public health and safety of nearby residences and property. No excessive grading will be conducted, as all grading will be associated with the construction of the new Proshop that is replacing the exisitng structure. No unnecessary cuts or fills will occur. The project will not impair any spring or existing watercourse as the development is located more than 2,800 feet south from any sensitive habitat.

(c) Grading will minimize impacts to the natural landscape, scenic, biological and aquatic resources, and minimize erosion impacts.

As the project is utilizing an existing building footprint and the topopgrahy of the property gently slopes in this area, grading quantities are minimal. The proposed grading has been designed to follow contours of the natural topography to the maximum extent possible.The majority of the proposed grading is for the storage of golf cart storage below the Proshop. Trees and landscaping have been added as part of the project conditions in Attachment B to enhance existing landscaping on the property.

(d) For grading associated with a new building or development site, the subject site shall be one that minimizes grading in comparison with other available development sites, taking into consideration other development constraints and regulations applicable to the project.

The project is located within the existing footproint of the Proshop which will be increased in order to accommodate a new indoor practice simulator. The overall location and siting of the project is optimal, and grading will not create any unnecessary grading into hillsides or other areas on the property.

(e) Grading and associated improvements will conform with the natural terrain and existing topography of the site as much as possible, and should not create a significant visual scar.

The proposed grading is designed to conform with natural terrain and will remain a single-story with a sublevel basement for underground golf cart storage. The development is utilizing existing cut and will expand this underground area slightly to accommodate storage. Any other location would require additional grading and would significally increase the area of disturbance. In order to accommodate an indoor practice golf simlulator, the existing Proshop building will be expaldned. All grading area the exterior of the building will blend with the natural terrain and existing topography.

(f) Grading conforms with any applicable general plan or specific plan policies;

The proposed grading is in conformance with specific findings and policies identified in the County General Plan policies R-GD 20 and R-GD 22 as the proposed grading within the property's natural slope and is the minimum neccesary to locate the new building within the same footprint. The applicnat worked carefully so as not to disturb additional use areas such as existing walkways and the adjacent fairway. The proposed grading minimizes grading by utilizing the existing building pad for development of the Proshop.

(g) Grading substantially conforms with the adopted *"Guidelines for Grading and Hillside Development"* and other applicable guidelines adopted by the County.

The proposed development is minimizing grading as much as possible by utilizing and current building pad and flat pad areas on the property. The development is not in a hillside area. No new driveways or parking areas are being expanded. For these reasons, the project substantially conforms with the County's *"Guidelines for Grading and Hillside Development."*

BACKGROUND

The Los Altos Golf (Golf Course) and Country Club (Country Club) was originally founded in 1923 on a 110-acre site. In 1966, the Planning Commission granted a Use Permit to allow the construction of a new dining room, pro-shop and snack shop within the existing structures of the Country Club. Between 1981 and 2006, the Planning Commission approved expansions and renovations to the Golf Course and the clubhouse areas. A major renovation of the Golf Course was approved by the Planning Commission in 2008. In 2011, a major modification to the Use Permit, ASA and Grading Approval was approved by the Planning Commission for a clubhouse remodel, expanded patio areas, lounge areas, yoga studios, expanded parking area and golf course.

The Applicant applied for an ASA and Grading Approval on November 20, 2018. The application was subsequently deemed incomplete on December 20, 2018. The applicant resubmitted the additional information and/or corrections on two occasions: January 9, 2019, and March 1, 2019. The application was officially deemed complete for further processing on March 26, 2019.

Given the interest of the project, staff assisted in holding a Community Meeting for the project on February 6, 2019. At this meeting a few community members had questions about the length and timing of construction. A public notice was mailed to all properties within a 300-foot radius on April 22, 2019. Staff has not received any public correspondence at the time this report was generated.

STAFF REPORT REVIEW

Prepared by: Valerie Negrete, Associate Planner
Reviewed by: Leza Mikhail, Principal Planner & Zoning Administrator

Attachment A

County of Santa Clara
Department of Planning and Development
County Government Center, East Wing, 7th Floor
70 West Hedding Street
San Jose, California 95110

	Administration	Development Services	Fire Marshal	Planning
Phone:	(408) 299-6740	(408) 299-5700	(408) 299-5760	(408)299-5770
Fax:	(408) 299-6757	(408) 279-8537	(408) 287-9308	(408) 288-9198

Statement of Exemption from the California Environmental Quality Act (CEQA)

File Number	APN(s)	Date
11471-18ASA-18G	331-11-125	5/2/19
Project Name	**Project Type**	
Los Altos Country Club	Commercial	
Owner	**Applicant**	
Los Altos Country Club	Craig Almaleh, ArtTec	
Project Location		
1560 Country Club Dr, Los Altos		
Project Description		
ASA and Grading Approval for 15,000 square foot ProShop		
All development permits processed by the County Planning Office which require discretionary approval must be evaluated for compliance with the California Environmental Quality Act (CEQA) of 1970 (as amended). Certain projects which meet criteria listed under CEQA may be deemed exempt from environmental review. The project described above has been evaluated by County Planning Staff under the provisions of CEQA and has been deemed to be exempt from any further environmental review per the provision(s) listed below.		
CEQA (Guidelines) Exemption Section:		
15302 (b), "Replacement or Reconstruction"		
Comments:		
Qualifies for exemption. Project includes no significant environmental impacts to replace an existing ProShop and construct a new ProShop in the same location.		
Prepared by: Valerie Negrete, Associate Planner _____ **Signature** _____ **Date**		

ATTACHMENT B
Conditions of Approval

ARCHITECTURE SITE APPROVAL AND GRADING APPROVAL

Date: May 2, 2019

Owner/Applicant: Los Altos Country Club.

Location: 1560 Country Club Drive, Los Altos (APN: 331-11-125)

File Number: PLN11471-18A-18G

CEQA: Use of Prior CEQA

Project Description: Architecture and Site Approval (ASA) and Grading Approval (G) for the demolition of an existing structure and construction of a new 15,000 square-foot Proshop. Grading quantities of 2,400 cubic yards of cut and 100 cubic yards of fill are approved. Three (3) protected trees are proposed for removal, including two (2) 23" Olive trees and (1) 35" Deodar Cedar tree.

If you have any question regarding the following conditions of approval, call the person whose name is listed as the contact for that agency. He or she represents a particular specialty or office and can provide details about the conditions of approval.

Agency	Name	Phone	E-mail
Planning	Valerie Negrete	(408) 299- 5791	Valerie.negrete@pln.sccgov.org
Environmental Health	Darrin Lee	(408) 299 - 5748	darrin.lee@cep.sccgov.org
Land Development Engineering	Ed Duazo	(408) 299 – 5733	Ed.duazo@pln.sccgov.org
Fire Department	Alex Goff	(408) 299-5763	Alex.goff@sccfd.org

STANDARD CONDITIONS OF APPROVAL

Planning

1. All conditions of approval from County File Use Permit No. 1427-11P-11A-11G dated December 1, 2011 shall remain in full force and effect and are applicable with this approval.

2. Development and maintenance of the project shall take place in accordance with approved plans, received by the Planning Department on February 19, 2019. The plans show the demolition of an existing approximate 8,500 square foot Proshop to build a new 15,000 square foot Proshop in the same general location.

3. The approximate 15,000 square foot Proshop shall be colored in the approved color, Divine White, as shown in the approved plans, received by the Planning Department on February 19, 2019.

4. In the event that previously unidentified historic or prehistoric archaeological resources are discovered during construction, the contractor shall cease work in the immediate area and the County Planning Office and Campus Archaeologist shall be contacted. An independent qualified archaeologist retained by the County at the expense of the applicant shall assess the significance of the find and make mitigation recommendations.

5. If archeological resources are discovered as described above, construction monitoring shall be conducted at any time ground-disturbing activities (greater than 12 inches in depth) are taking place in the immediate vicinity of the identified resources. If monitoring does not produce evidence of significant cultural resources within the project area, further mitigation shall be limited to construction monitoring, unless additional testing or other specific mitigation measures are determined by a qualified archaeologist to be necessary to ensure avoidance of damage to significant archaeological resources. A technical report of findings describing the results of all monitoring shall be prepared in accordance with professional standards. The archaeological monitoring program shall be implemented by an individual meeting the Secretary of Interior Professional Qualifications Standards in Archaeology (36 CFR 61); individual field monitors shall be qualified in the recognition of cultural resources and possess sufficient academic and field training as required to conduct the work effectively and without undue delay.

6. In the event that human skeletal remains are encountered, the applicant is required by County Ordinance No. B6-18 to immediately notify the County Coroner. Upon determination by the County Coroner that the remains are Native American, the coroner shall contact the California Native American Heritage Commission, pursuant to subdivision (c) of section 7050.5 of the Health and Safety Code and the County Coordinator of Indian affairs. No further disturbance of the site may be made except as authorized by the County Coordinator of Indian Affairs in accordance with the provisions of state law and this chapter. If artifacts are found on the site a qualified archaeologist shall be contacted along with the County Planning Office. No further disturbance of the artifacts may be made except as authorized by the County Planning Office.

<u>Department of Environmental Health</u>

7. All construction activities shall be in conformance with the Santa Clara County Noise Ordinance Section B11-154 and prohibited between the hours of 7:00 p.m. and 7:00 a.m. on weekdays and Saturdays, or at any time on Sundays for the duration of construction. All activities must comply with the Santa Clara County Noise Ordinance at all times

Land Development Engineering

8. Property owner is responsible for the adequacy of any drainage facilities and for the continued maintenance thereof in a manner that will preclude any hazard to life, health or damage to adjoining property.

Fire Marshal's Office

9. The building shall be equipped with an approved automatic fire sprinkler system complying with NFPA 13 because addition exceeds 500 sq. ft. and total floor area exceeds 3,600 sq. ft. Fire sprinklers may also be required by the Building Code for your project.

10. Should the Fire Marshal standards conflict with any other local, state or federal requirement, the most restrictive shall apply. Construction of access roads and driveways shall use good engineering practice.

11. Fire department Access Roads shall be provided within 150-ft. of all exterior portions of all structures. Access roads shall comply with the following:

    a. Width: Clear width of drivable surface of 20-ft.

    b. Vertical Clearance: 15-ft.

    c. Inside Curve Radius: 42-ft.

    d. Grade: Maximum grade shall not exceed 15%.

    e. Surface: All driving surfaces shall be all-weather and capable of sustaining 75,000-pound gross vehicle weight.

    f. Gates: Gates shall not obstruct the required width or vertical clearance of the driveway and may require a Fire Department Lock Box/Gate Switch to allow for fire department access. Installation shall comply with CFMO-A3.

    g. All fire apparatus access roads meeting the minimum width shall have permanent "no parking fire lane" signs located so that all access roads are clearly identified, and the required clearance maintained as per CFC 503.3.

h. Driveways (fire apparatus access roads within the property) shall be provided within 150-ft. of all exterior portions of all structures. Access roads shall comply with the following:

A) Width: Clear width of drivable surface of 20 ft.

B) Vertical Clearance: 13-ft. 6-in.

C) Curve radius, grade, surface, bridges and gates shall comply with the provisions listed for Access Roads.

F) Surface: All driving surfaces shall be all-weather and capable of sustaining 75,000-pound gross vehicle weight.

I) Gates: Gates shall not obstruct the required width or vertical clearance of the driveway and may require a Fire Department Lock Box/Gate Switch approved by the responding fire department to allow for fire department access. Installation shall comply with CFMO-A3.

J) All fire apparatus access roads meeting the minimum width shall have permanent "no parking fire lane" signs located so that all access roads are clearly identified and the required clearance maintained as per CFC §503.1.2.

K) A number address approved by the Building Inspection Office shall be placed on the building (or at the entrance to the facility) in such a position as to be plainly visible and legible from the street or road fronting the property. [REF: CFC §505.1]

CONDITIONS OF APPROVAL TO BE COMPLETED PRIOR TO GRADING OR BUILDING PERMIT ISSUANCE

Planning

12. **Prior to issuance of any permits**, the applicant shall pay all reasonable costs associated with the work by the Department of Planning and Development.

13. Submit a Construction Management and Logistics Plan for approval by Planning and Land Development Engineering, **prior to issuance of any grading permits**, that clearly identifies the elements listed below:

A. The location, anticipated quantities and time frame for construction staging and earthwork stockpiling associated with this project. Said location is required to be approved by Planning and Land Development Engineering.
B. Provide off-street construction related parking. Identify off-street parking location(s) on site plan for all construction related vehicles (employee parking and construction

equipment) throughout the construction period. If adequate parking cannot be provided on the construction sites, identify on the site plan or vicinity map the satellite parking location(s) that will be used.

C. Prohibit impacts to accessing public transit access and movement of public transit vehicles. Identify on site plan all temporary or permanent access limitations, re-routes, lane closures, or limits to public transit movements or place a note on the site plan stating *"No temporary or permanent access limitations, re-routes, lane closures, or limits to public transit movement are permitted."*

D. Provide written notification to all contractors and subcontractors regarding appropriate routes and weight limits and speed limits for local roads used to access construction sites. Provide one copy of the notices to the County Planning Office.

14. Verification of adequate signs shall be posted along Loyola Drive and in front of the project site, no smaller than 1,296 square inches in size, containing the name, telephone number, and email address of the appropriate person the public may contact to register a complaint about construction noise. The applicant shall keep a written record of all such complaints and shall provide copies of these records to the County Planning Office.

15. **Prior to issuance of building permit**, the applicant shall submit a copy of the approved landscape and irrigation system plan, prepared and stamped by a licensed landscape architect or contractor to Planning Office. Plan shall include tree replacement as recommended by the Arborist Report dated November 20, 2018, prepared by Ned Patchett. At minimum there shall be no less than ten (10) 24" boxed native trees to replace the three (3) trees proposed for removal.

16. Applicant shall adhere to tree protection measures described in the Arborist Report dated November 20, 2018, prepared by Ned Patchett. This includes but is not limited to protective fencing around existing trees adjacent to construction during any grading or building activity.

<u>Fire Marshal's Office</u>

17. A written construction site safety plan shall be submitted directly to the Fire Marshal's Office prior to approval of any Land Development Engineering construction permit (if required) or prior to approval of the building permit.

18. Fire protection water system shall be installed and inspected prior to approval of the foundation or final inspection for construction with completely noncombustible components. System shall be maintained in good working order and accessible throughout construction. A Stop-Work Order may be placed on the project if the required hydrant systems are not installed, accessible, and/or functioning.

19. Minimum fire-flow for this facility/structure shall be 1,500 gallons per minute (gpm) at 20 pounds per square inch (psi) for 2 hours based on 15,898 type V-A construction with a reduction for the installation of a NFPA 13 fire sprinkler system. NOTE: The fire-flow

may be adjusted depending upon the final size of the structure shown on the building permit set of drawings.

20. Standard hydrant(s) shall be provided within 400-ft. of all portions of the/all structure(s). The number of hydrants shall be determined by Table C105.1 and the number needed to meet the distance requirement. Hydrant placement shall be approved by this office. NOTE: a listed fire pump may be required. [REF: 2007 CFC §508.5.1]

21. **At the time of plan submittal for building permit**, provide written verification from the water company that these condition can be satisfied. NOTE: water company must supply location of nearest hydrant(s) in addition to available fire-flow at 20 psi. More than one hydrant may be used to satisfy this requirement if spacing does not exceed spacing per CFC Table C105.1.

22. A separate permit shall be obtained from the Fire Marshal's Office by a state licensed contractor prior to installation of hydrant system and any listed fire pump. Please allow for a minimum of 30 days for plan review.

    IMPORTANT: Fire protection water system shall be installed and inspected **prior to approval of the foundation**. System shall be maintained in good working order and accessible throughout construction. A Stop-Work order may be placed on the project if the required hydrant systems are not installed, accessible, and/or functioning.

23. The building shall be equipped with an approved automatic fire sprinkler system complying with NFPA 13, to be verified **prior to issuance of building permit issuance**.

Department of Environmental Health

24. **Prior to issuance of a building permit**, provide a sewer connection permit from the City of Los Altos Engineering Department (ph. 650-947-2780)

25. **Prior to issuance of a building permit**, provide a water connection letter from the water purveyor, California Water Service Company. Call 650-917-0152 for information.

Land Development Engineering

26. Obtain a Grading Permit from Land Development Engineering (LDE) **prior to beginning any construction activities**. Issuance of the grading permit is required **prior to LDE clearance of the building permit** (building and grading permits may be applied for concurrently). The process for obtaining a grading permit and the forms that are required can be found at the following web page:

    www.sccplanning.org > I Want to.. > Apply for a Permit > Grading Permit

If the County Roads and Airports Department provides a condition of approval to obtain an encroachment permit, for your convenience, the grading and encroachment permits will be processed concurrently under one set of improvement (grading) plans.

Please contact LDE at (299-5734) for additional information and timelines.

27. Final plans shall include a single sheet which contains the County standard notes and certificates as shown on County Standard Cover Sheet. Plans shall be neatly and accurately drawn, at an appropriate scale that will enable ready identification and recognition of submitted information.

28. Final improvement plans shall be prepared by a licensed civil engineer for review and approval by LDE and the scope of work shall be in substantial conformance with the conditionally approved preliminary plans on file with the Planning Office. Include plan, profile, typical sections, contour grading for all street, road, driveway, structures and other improvements as appropriate for construction. The final design shall be in conformance with all currently adopted standards and ordinances. The following standards are available on-line:

    March 1981 Standards and Policies Manual, Volume 1 (Land Development)
    www.sccplanning.org > Plans & Ordinances > Land Development Standards and Policies

    § 2007 Santa Clara County Drainage Manual
    www.sccplanning.org > Plans & Ordinances > Grading and Drainage Ordinance

29. Survey monuments shall be shown on the improvement plan to provide sufficient information to locate the proposed improvements and the property lines. Existing monuments must be exposed, verified and noted on the grading plans. Where existing monuments are below grade, they shall be field verified by the surveyor and the grade shall be restored and a temporary stake shall be placed identifying the location of the found monument. If existing survey monuments are not found, temporary staking delineating the property line may be placed **prior to construction** and new monuments shall be set **prior to final acceptance of the improvements**. The permanent survey monuments shall be set pursuant to the State Land Surveyor's Act. The Land Surveyor / Engineer in charge of the boundary survey shall file appropriate records pursuant to Business and Professions Code Section 8762 or 8771 of the Land Surveyors Act with the County Surveyor.

30. The improvement plans shall include an Erosion and Sediment Control Plan that outlines seasonally appropriate erosion and sediment controls during the construction period). Include the County's Standard Best Management Practice Plan Sheets BMP-1 and BMP-2 with the Plan Set.

31. All applicable easements affecting the parcel(s) with benefactors and recording information shall be shown on the improvement plans.

32. Provide a drainage analysis prepared by a licensed civil engineer in accordance with criteria as designated in the 2007 County Drainage Manual (see Section 6.3.3 and Appendix L for design requirements). The on-site drainage will be controlled in such a manner as to not increase the downstream peak flow for the 10-year and 100-year storm event or cause a hazard or public nuisance. The mean annual precipitation is available on the on-line property profile.

33. All new on-site utilities, mains and services shall be placed underground and extended to serve the proposed development. All extensions shall be included in the improvement plans. Off-site work should be coordinated with any other undergrounding to serve other properties in the immediate area.

34. Provide a Storm Water Management Plan. The Storm Water Management Plan shall incorporate site design measures, source control measures, and show drainage management areas, treatment measures, and hydromodification features, as applicable. Sizing calculations for the treatment measures and hydraulic analysis of the hydromodification will be required. Please see the C.3 Stormwater Handbook published by the Santa Clara Valley Urban Runoff Pollution Prevention Program (SCVURPPP). Information is available at www.scvurppp.org.

35. Submit one copy of the signed and stamped of the geotechnical report for the project.

36. Submit a plan review letter by the Project Geotechnical Engineer certifying that the geotechnical recommendation in the above geotechnical report have been incorporated into the improvement plan.

37. Indicate on the improvement plans the land area that will be disturbed. If one acre or more of land area will be disturbed, file a Notice of Intent (NOI) with the State Water Resources Control Board (SWRCB) for coverage under the State General Construction Permit. The SWRCB will issue a Waste Discharge Identification number (WDID). The WDID number shall be shown on the on the final improvement plans. The SWRCB web site is at: www.waterboards.ca.gov > Water Issues > Programs > Stormwater

CONDITIONS OF APPROVAL TO BE COMPLETED PRIOR TO BUILDING PERMIT FINAL

Planning

38. A certified arborist shall monitor the construction and provide written recommendations to preserve any potentially impacted trees associated with the proposed improvements. Submit a plan-review and a construction-observation letter **prior to the issuance of**

final occupancy summarizing implementation of these mitigation measures.

Environmental Health

39. **Prior to final occupancy**, provide proof of garbage service at the time of final occupancy sign-off. Garbage service in the unincorporated areas of Santa Clara County is mandatory.

Land Development Engineering

40. Existing and set permanent survey monuments shall be verified by inspectors **prior to final acceptance of the improvements** by the County. Any permanent survey monuments damaged or missing shall be reset by a licensed land surveyor or registered civil engineer authorized to practice land surveying and they shall file appropriate records pursuant to Business and Professions Code Section 8762 or 8771 of the Land Surveyors Act with the County Surveyor.

41. Construct the improvements. Construction staking is required and shall be the responsibility of the developer.

Fire Marshall's Office

42. The fire sprinkler system shall be installed and finaled by this office **prior to occupancy**. A separate permit shall be obtained from the Fire Marshal's Office by a state licensed C-16 contractor **prior to installation**. Please allow for a minimum of 30 days for plan review of fire sprinkler plans.

These conditions, approved on May 2, 2019 by the Zoning Administrator, are valid for a period of four (4) years.

THE CONDITIONS OF APPROVAL MUST BE COMPLETED, AND A BUILDING PERMIT ISSUED BY MAY 2, 2023, UNLESS AN EXTENSION OF TIME APPLICATION IS MADE AND GRANTED, OR THIS SINGLE BUILDING SITE APPROVAL SHALL BECOME VOID.

This approval is based upon information submitted on the application form and approved plans. Erroneous information, omission of relevant information or substantial changes will void this approval.

_____

Valerie Negrete, Associate Planner

Attachment C

File: 11471
APN: 331-11-125

Vicinity Map

0 250 500 Feet

N

This map created by the Santa Clara County Planning Office. The GIS data was compiled from various sources. While deemed reliable, the Planning Office assumes no liability.
4/18/2019 3:03:56 PM Y:\Projects\11471\11471_vicinity_map.mxd

Attachment D

An Architectural and Site Approval Application for:

LOS ALTOS GOLF AND COUNTRY CLUB

1560 Country Club Drive

Los Altos, California

1. VIEW FROM FIRST HOLE FAIRWAY

DRAWING INDEX AND ISSUE DATES

○ PRELIMINARY OR PRICING PLANS
● FIRST FORMAL SUBMITTAL OR NO CHANGES SINCE PREVIOUS ISSUE
✚ MODIFICATIONS SINCE PREVIOUS ISSUE

ISSUE DATES AND DESCRIPTIONS

Sheet	Description	11.20.2018 ASA SUBMITTAL	01.07.2019 ASA RESUBMITTAL	02.19.2019 ASA RESUBMITTAL
	COVER SHEET	●	●	●
	ARCHITECTURAL			
A0.01	NEIGHBORHOOD CONTEXT PHOTOS			●
A1.00	EXISTING SITE/ DEMOLITION PLAN	●	●	●
A1.01	SITE PLAN	●	●	●
A1.02	SITE PHOTOMETRIC PLAN			●
A2.11	LOWER LEVEL FLOOR PLAN	●	●	●
A2.12	UPPER LEVEL FLOOR PLAN	●	●	●
A2.31	ROOF PLAN	●	●	●
A3.11	EXTERIOR ELEVATIONS	●	●	●
A3.12	ENLARGED ENTRY TOWER ELEVATION AND SECTION		●	●
A3.31	EXTERIOR RENDERINGS	●	●	●
A3.32	EXTERIOR RENDERINGS	●	●	●
A4.01	BUILDING SECTIONS AND DETAILS	●	●	●
A4.02	DOOR AND WINDOW DETAILS	●	●	●
	CIVIL			
CV	COVER SHEET	●	●	●
C1.0	TOPOGRAPHIC SURVEY	●	●	●
C1.1	TOPOGRAPHIC SURVAY	●	●	●
C2	TYPICAL SECTIONS	●	●	●
C3	PRELIMINARY GRADING & DRAINAGE PLAN	●	●	●
C4	PRELIMINARY UTILITY PLAN	●	●	●
C5	STORM WATER QUALITY CONTROL PLAN	●	●	●
C6	FIRE EXHIBIT		●	●
	LANDSCAPE			
L0.1	ILLUSTRATIVE LANDSCAPE PLAN	●	●	●
L0.2	PRELIMINARY PLANTING PLAN	●	●	●
L0.3	PRELIMINARY IRRIGATION PLAN	●	●	●

PROJECT DATA

OWNER NAME: LOS ALTOS GOLF AND COUNTRY CLUB

PROJECT ADDRESS: 1560 COUNTRY CLUB DRIVE
LOS ALTOS, CALIFORNIA 94024

BUILDING AREA:	15,898 S.F.
NUMBER OF STORIES:	2
CONSTRUCTION TYPE:	V-A
FIRE SPRINKLERS:	YES
OCCUPANCY TYPE:	B
ZONING:	A, R1E-1AC
SITE AREA:	86.4 AC / 3,764,199 S.F.

APPLICABLE CODES

2016 CALIFORNIA BUILDING CODE (CCR TITLE 24, PART 2)
2016 CALIFORNIA ELECTRIC CODE (CCR TITLE 24, PART 3)
2016 CALIFORNIA MECHANICAL CODE (CCR TITLE 24, PART 4)
2016 CALIFORNIA PLUMBING CODE (CCR TITLE 24, PART 5)
2016 CALIFORNIA ENERGY CODE (CCR TITLE 24, PART 6)
2016 CALIFORNIA FIRE CODE (CCR TITLE 24, PART 9)
2016 CALIFORNIA GREEN BUILDING STANDARDS CODE (CCR TITLE 24, PART 11)

ALL CODES ARE SUBJECT TO LOCAL GOVERNMENT AMENDMENTS PER CALIFORNIA BUILDING STANDARDS COMMISSION BULLETIN 10-03.

PROJECT DESCRIPTION

THIS PROJECT CONSISTS OF A NEW PRO SHOP BUILDING TOTALING 15,898 S.F. OVER 2 LEVELS.

SCOPE OF WORK INCLUDES CONSTRUCTION OF THE BUILDING SHELL AND INTERIORS AS WELL AS SITE IMPROVEMENTS WHICH INCLUDE LANDSCAPING AND HARDSCAPE.

VICINITY MAP

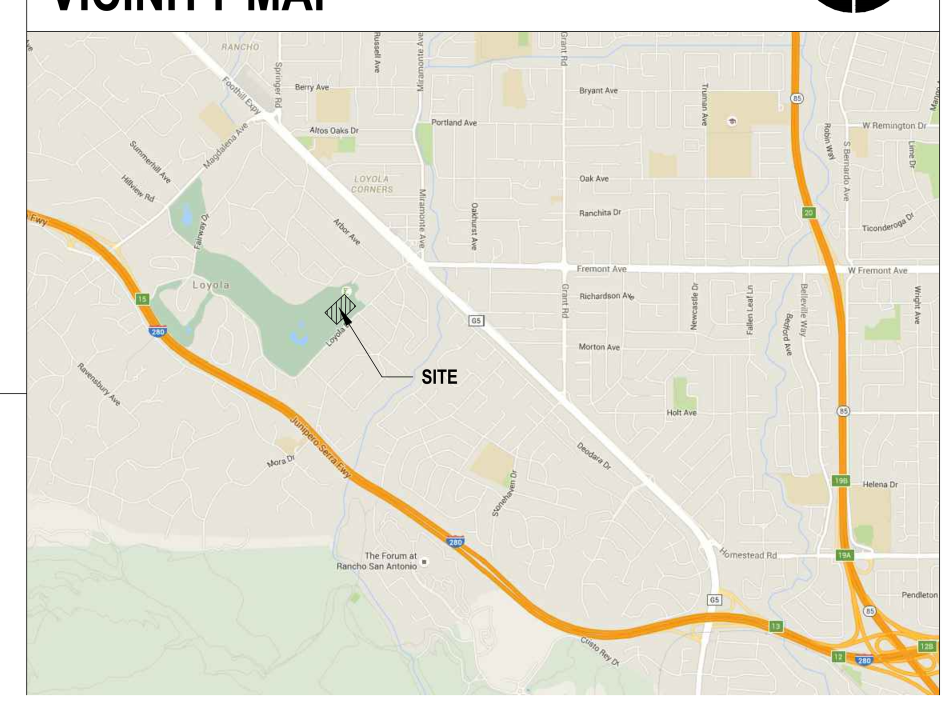

PROJECT TEAM

OWNER: LOS ALTOS GOLF & COUNTRY CLUB
1560 Country Club Drive
Los Altos, CA 94024
PHONE: 650.947.3100
CONTACT: David Hiebert
EMAIL: david@hieberthome.com

ARCHITECT: ARC TEC INC.
99 Almaden Boulevard, Suite 840
San Jose, CA 95113
PHONE: 408.496.0676
CONTACT: Rob Wood
EMAIL: RobW@arctecinc.com

CIVIL ENGINEER: KIER & WRIGHT
3350 Scott Blvd., Building 22
Santa Clara, CA 95054
PHONE: 408.727.6665
CONTACT: Mark Knudsen
EMAIL: mknudsen@kierwright.com

LANDSCAPE ARCHITECT: KLA, Inc.
151 N. Norlin Street
Sonora, CA 95370
PHONE: 209.532.2856
CONTACT: Tom Holloway
EMAIL: tom@kla-ca.com

ARC TEC
ARCHITECTURAL TECHNOLOGIES
www.arctecinc.com
Arizona
2960 East Northern Avenue, Building C
Phoenix, AZ 85028 602.953.2355
California
1731 Technology Drive, Suite 750
San Jose, CA 95113 408.496.1121

The "user(s)" in possession of this documentation acknowledge(s) that ARC TEC's and ARC TEC consultants' drawings, specifications, reports, electronic data and other documentation are instruments of service. ARC TEC and ARC TEC consultants shall be deemed the author and owner of such documentation. The "user(s)" in possession of this documentation shall not sue or authorize any other person to use ARC TEC's or ARC TEC consultants' instruments of service. Reuse without ARC TEC's written authorization will be at the user(s) sole risk and without liability to ARC TEC and ARC TEC's consultants. The user(s) possessing this documentation shall indemnify and hold harmless ARC TEC and ARC TEC's consultants and agents and employees from and against all claims, damages losses and expenses, including but not limited to attorneys' fees, arising out of unauthorized reuse of ARC TEC or ARC TEC's consultants instruments of service. Written dimensions on this drawing shall have precedence over any scaled dimension. DO NOT SCALE THIS DRAWING for accurate dimensions and notify ARC TEC of any discrepancies.

© Copyright ARC TEC, Inc. 2018

In Association with:

An Architectural and Site Approval Application for:
LOS ALTOS GOLF AND COUNTRY CLUB
1560 Country Club Drive
Los Altos, California

PROJECT NO: 154085

DATE: 2/18/19 PRINTED BY: Daniel Gottlieb PAGESETUP: ---- PEN SETTING: ARCTEC.ctb
PATH: P:\2015 JOBS\154085 LOS ALTOS GOLF AND COUNTRY CLUB\01-PLANNING\2019-0219 3RD COUNTY ASA SUBMITTAL\154085-A0000.DWG
P:\2015 Jobs\154085 Los Altos Golf and Country Club\01-Planning\2018-1121-County ASA Submittal\154085-A0000.dwg - Nov 05, 2018, 1:55pm - annap

9

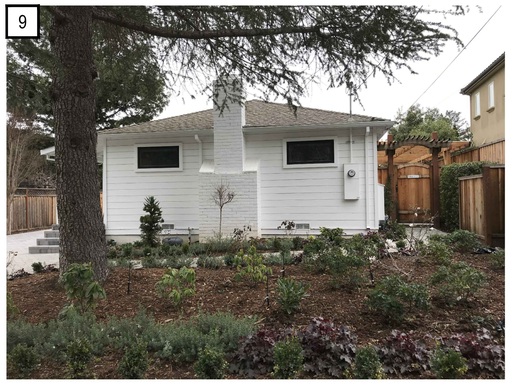

981 TERRACE DRIVE

5

901 LOYOLA DRIVE

1

710 LOYOLA DRIVE

10

999 TERRACE DRIVE

6

932 TERRACE DRIVE

2

748 LOYOLA DRIVE

11

1613 CRESTVIEW DRIVE

7

941 TERRACE DRIVE

3

801 LUNDY LANE

12

1619 CRESTVIEW DRIVE

8

946 TERRACE DRIVE

4

900 LOYOLA DRIVE

ARC TEC
ARCHITECTURAL TECHNOLOGIES
www.arctecinc.com

Arizona
2960 East Northern Avenue, Building C
Phoenix, AZ 85028 602.953.2355

California
1731 Technology Drive, Suite 750
San Jose, CA 95113 408.496.1121

The "user(s)" in possession of this documentation acknowledge(s) that ARC TEC's and ARC TEC consultants' drawings, specifications, reports, electronic data and other documentation are instruments of service. ARC TEC and ARC TEC consultants shall be deemed the author and owner of such documentation. The "user(s)" in possession of this documentation shall not sue or authorize any other person to use ARC TEC's or ARC TEC consultants' instruments of service. Reuse without ARC TEC's written authorization will be at the user(s) sole risk and without liability to ARC TEC and ARC TEC's consultants. The user(s) possessing this documentation shall indemnify and hold harmless ARC TEC and ARC TEC consultants and their employees from and against all claims, damages losses and expenses, including but not limited to attorneys' fees, arising out of unauthorized reuse of ARC TEC or ARC TEC's consultants instruments of service.
Written dimensions on this drawing shall have precedence over any scaled dimension. DO NOT SCALE THIS DRAWING for accurate dimensions and notify ARC TEC of any discrepancies.

© Copyright ARC TEC, Inc. 2015

In Association with:

An Architectural and Site Approval Application for:

LOS ALTOS GOLF AND COUNTRY CLUB

1560 Country Club Drive
Los Altos, California

Los Altos Golf and Country Club

DATE	DESCRIPTION
11.20.2018	COUNTY ASA SUBMITTAL
01.07.2019	COUNTY ASA RESUBMITTAL
02.19.2019	COUNTY ASA RESUBMITTAL

NEIGHBORHOOD CONTEXT PHOTOS

A0.01

PROJECT NO: 154085

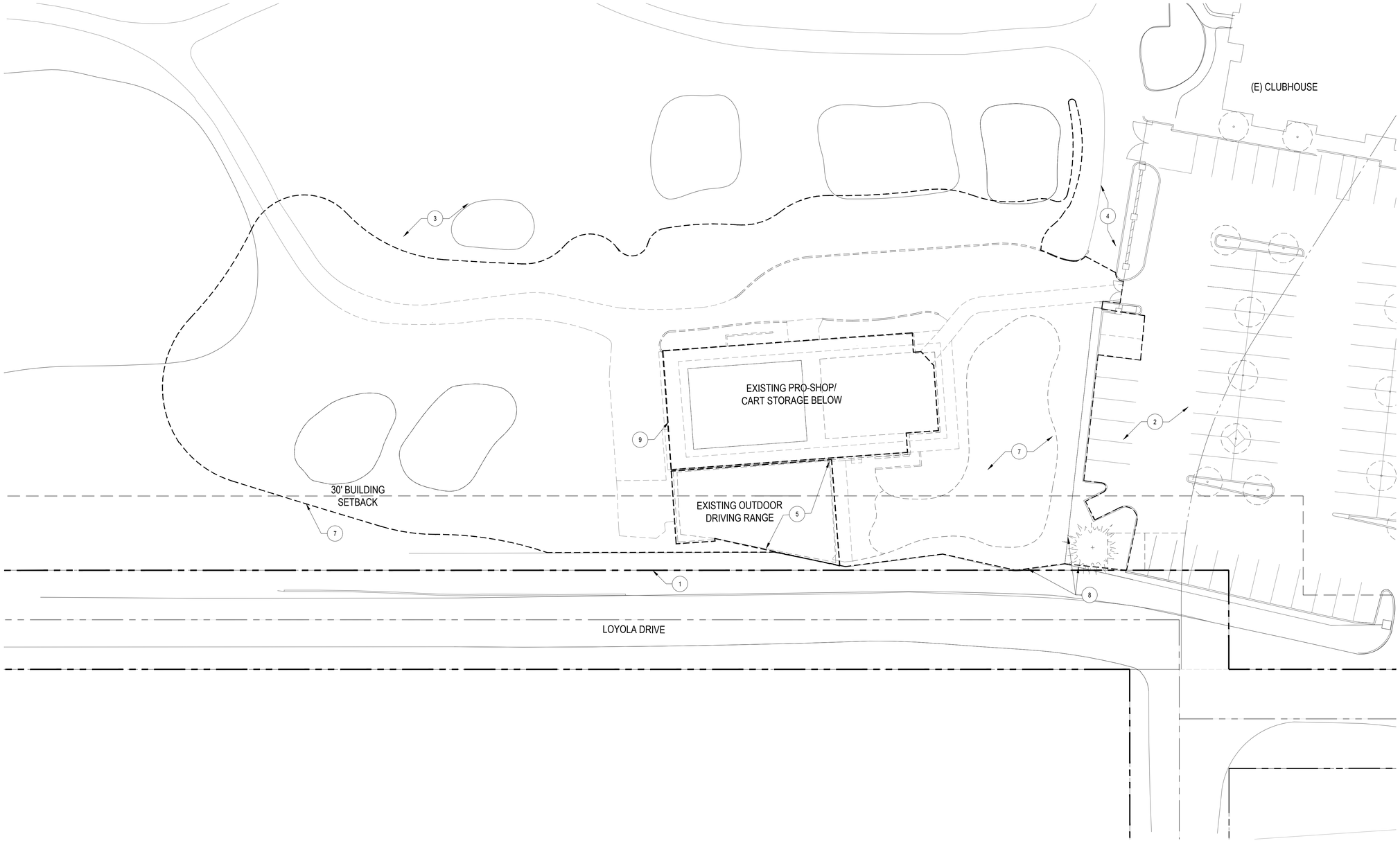

EXISTING SITE/DEMOLITION PLAN

SCALE: 1" = 20' - 0"

KEY NOTES

1. EXISTING PROPERTY LINE = RIGHT OF WAY
2. (E) PAVED PARKING AND DRIVES TO REMAIN
3. (E) LANDSCAPE AREA TO REMAIN
4. (E) WALKWAY AND HARDSCAPE TO REMAIN
5. (E) DRIVING RANGE TO BE REMOVED
6. NOT USED
7. EXTENT OF SITE IMPROVEMENTS. REFER TO ARCHITECTURAL, CIVIL, & LANDSCAPE FOR SPECIFIC AREAS OF IMPROVEMENTS
8. (E) FENCE TO REMAIN
9. (E) PRO SHOP TO BE DEMOLISHED

ARC TEC
ARCHITECTURAL TECHNOLOGIES
www.arctecinc.com
Arizona
2960 East Northern Avenue, Building C
Phoenix, AZ 85028 602.953.2355
California
1731 Technology Drive, Suite 750
San Jose, CA 95113 408.496.1121

The "user(s)" in possession of this documentation acknowledge(s) that ARC TEC's and ARC TEC consultants' drawings, specifications, reports, electronic data and other documentation are instruments of service. ARC TEC and ARC TEC consultants shall be deemed the author and owner of such documentation. The "user(s)" in possession of this documentation shall not sue or authorize any other person to use ARC TEC's or ARC TEC consultants' instruments of service. Reuse without ARC TEC's written authorization will be at the user(s) sole risk and without liability to ARC TEC and ARC TEC's consultants. The user(s) possessing this documentation shall indemnify and hold ARC TEC and ARC TEC's consultants harmless and defend their employees from and against all claims, damages losses and expenses, including but not limited to attorneys' fees, arising out of unauthorized reuse of ARC TEC or ARC TEC's consultants instruments of service.

Written dimensions on this drawing shall have precedence over any scaled dimension. DO NOT SCALE THIS DRAWING for accurate dimensions and notify ARC TEC of any discrepancies.

© Copyright ARC TEC, Inc. 2015

In Association with:

An Architectural and Site Approval Application for:

LOS ALTOS GOLF AND COUNTRY CLUB

1560 Country Club Drive
Los Altos, California

DATE	DESCRIPTION
11.20.2018	COUNTY ASA SUBMITTAL
01.07.2019	COUNTY ASA RESUBMITTAL
02.19.2019	COUNTY ASA RESUBMITTAL

EXISTING SITE/DEMOLITION PLAN

A1.00

PROJECT NO: 154085

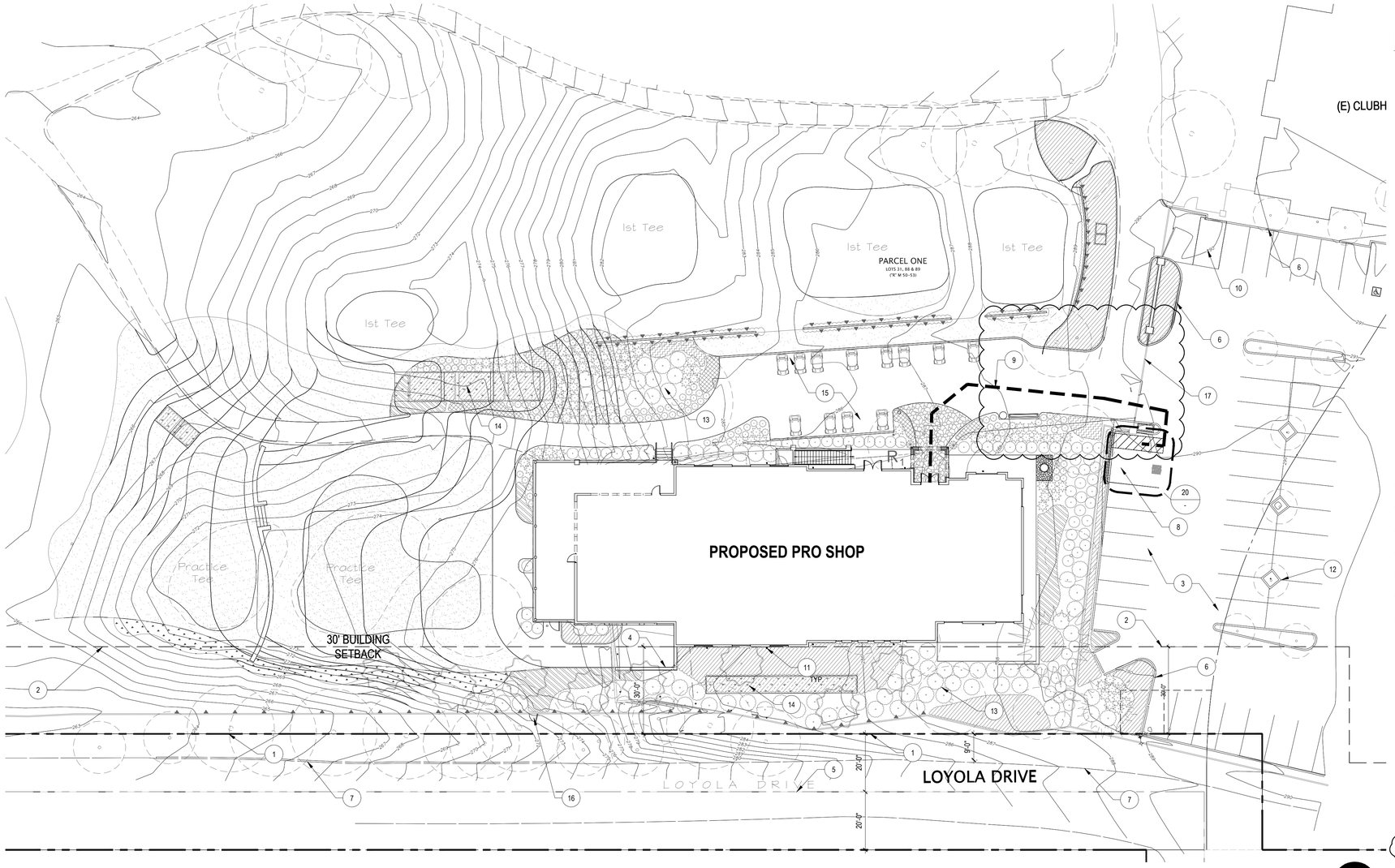

SITE PLAN

SCALE: 1"= 20' - 0"

PROJECT DATA

APN:	331-11-125, 331-08-005
COUNTY ZONING:	A, R1E-1AC
SITE AREA:	86.4 AC / 3,764,199 S.F.
COUNTY SETBACK:	30'-0"
NUMBER OF STORIES (2 ALLOWED):	1
BUILDING HEIGHT (30' ALLOWED):	21'-8"
PROPOSED UPPER LEVEL:	8,585 S.F.
PROPOSED BASEMENT LEVEL:	7,313 S.F.
TOTAL BUILDING AREA:	15,898 S.F.

PARKING ANALYSIS

STANDARD PARKING SPACES:	243 SPACES
ACCESSIBLE PARKING SPACES:	8 SPACES
NEW ACCESSIBLE PARKING STALLS:	1 SPACES
TOTAL PARKING SPACES:	252 SPACES

AUTOMOBILE PARKING STALL DIMENSIONS

STALL TYPE	WIDTH	DEPTH	COMPLIANT
STANDARD	8'-6"	18'-0"	YES

REQUIRED NUMBER OF ACCESSIBLE PARKING STALLS (CBC TABLE 11B-208.2)

TOTAL PARKING SPACES	MINIMUM REQUIRED	COMPLIANT
201-300	7	YES

KEY NOTES

NOT ALL KEYNOTES MAY APPLY

1. EDGE OF RIGHT-OF-WAY / PROPERTY LINE
2. 30' SETBACK FROM THE EDGE OF RIGHT-OF-WAY / PROPERTY LINE
3. (E) ASPHALT PAVING
4. COMPLIANT RETAINING WALL IN ACCORDANCE WITH SANTA CLARA ZONING ORDINANCE 4.20.110 A.4 (HEIGHT LIMITATION CONFORMS), SEE CIVIL
5. CENTER OF RIGHT-OF-WAY
6. (E) CONCRETE CURB
7. EDGE OF PAVEMENT
8. NEW ACCESSIBLE VAN PARKING STALL STRIPING, SEE DETAIL 20/-
9. ACCESSIBLE PATH OF TRAVEL
10. NEW PARKING STALL
11. DOWNSPOUT NOZZLE LOCATION
12. (E) LANDSCAPE, REFER TO LANDSCAPE SHEETS
13. LANDSCAPED AREA, REFER TO LANDSCAPE SHEETS
14. BIO-RETENTION AREA, REFER TO CIVIL SHEETS
15. HARDSCAPE, REFER TO LANDSCAPE SHEETS
16. NEW PEDESTRIAN GATE IN (E) FENCE WITH KNOX BOX FOR FIRE DEPARTMENT ACCESS
17. NEW 26' WIDE FIRE ACCESS GATE WITH KNOX BOX FOR FIRE DEPARTMENT ACCESS

ARC TEC
ARCHITECTURAL TECHNOLOGIES
www.arctecinc.com
Arizona
2960 East Northern Avenue, Building C
Phoenix, AZ 85028 602.953.2355
California
1731 Technology Drive, Suite 750
San Jose, CA 95113 408.496.1121

The "user(s)" in possession of this documentation acknowledge(s) that ARC TEC's and ARC TEC consultants' drawings, specifications, reports, electronic data and other documentation are instruments of service. ARC TEC and ARC TEC consultants shall be deemed the author and owner of such documentation. The "user(s)" in possession of this documentation shall not sue or authorize any other person to use ARC TEC's or ARC TEC consultants' instruments of service. Reuse without ARC TEC's written authorization will be at the user(s) sole risk and without liability to ARC TEC and ARC TEC's consultants. The user(s) possessing this documentation shall indemnify and hold harmless ARC TEC and ARC TEC consultants and their officers and employees from and against all claims, damages losses and expenses, including but not limited to attorneys' fees, arising out of unauthorized reuse of ARC TEC or ARC TEC's consultants instruments of service.
Written dimensions on this drawing shall have precedence over any scaled dimension. DO NOT SCALE THIS DRAWING for accurate dimensions and notify ARC TEC of any discrepancies.

© Copyright ARC TEC, Inc. 2015

In Association with:

An Architectural and Site Approval Application for:

LOS ALTOS GOLF AND COUNTRY CLUB

1560 Country Club Drive
Los Altos, California

Los Altos GOLF AND COUNTRY CLUB

DATE	DESCRIPTION
11.20.2018	COUNTY ASA SUBMITTAL
01.07.2019	COUNTY ASA RESUBMITTAL
02.19.2019	COUNTY ASA RESUBMITTAL

SITE PLAN

A1.01

PROJECT NO: 154085

1. ALL PARKING SPACES AND ACCESS AISLE SHALL HAVE A MAXIMUM SLOPE IN ALL DIRECTIONS OF 1:48.
2. PEDESTRIAN WAYS WHICH ARE ACCESSIBLE TO PERSONS WITH DISABILITIES SHALL BE PROVIDED FROM EACH ACCESSIBLE SPACE TO RELATED FACILITIES. REFER TO SITE PLAN FOR LOCATION OF ACCESSIBLE PATH OF TRAVEL LINKING ACCESS AISLE TO RELATED FACILITIES.
3. ACCESS AISLE MAY BE SHARED BY TANDEM SPACES. IF ONE SPACE IS VAN ACCESSIBLE, THE ACCESS AISLE MUST BE ON THE PASSENGER SIDE OF SPACE.
4. VAN PARKING (CONFIGURATION A) SHALL BE PERMITTED TO BE 108" (9'-0") WIDE MINIMUM WHERE THE ACCESS AISLE IS 96" (8'-0") WIDE MINIMUM. ACCESS AISLE FOR VAN ACCESSIBLE PARKING SHALL BE ON THE PASSENGER SIDE.
5. WHEN NO CURB OR BARRIER IS PROVIDED AT THE FRONT OF STALL AND THERE IS A WALKWAY IN FRONT OF THE STALL, A WHEEL STOP IS REQUIRED WHICH WILL PREVENT ENCROACHMENT OF CARS OVER WALKWAYS.

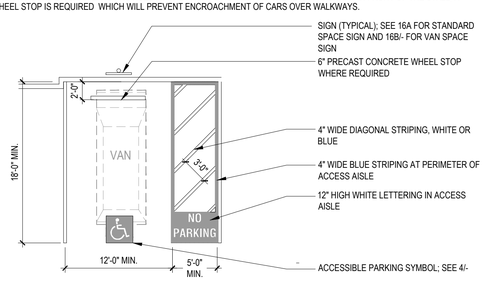

20 ACCESSIBLE PARKING SPACES

SCALE: 1/8" = 1'-0"

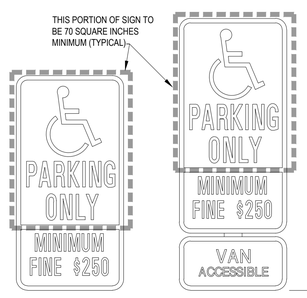

SIGN TYPE A:
ACCESSIBLE CAR PARKING SPACE IDENTIFICATION

SIGN TYPE B:
ACCESSIBLE VAN PARKING SPACE IDENTIFICATION

ACCESSIBLE PARKING IDENTIFICATION SIGNAGE

1. REFLECTORIZED PORCELAIN FINISH ON STEEL WITH BEADED TEXT OR EQUAL
2. LETTERS AND SYMBOLS TO BE WHITE ON A DARK BLUE BACKGROUND
3. SIGN TO BE CENTERED AT THE INTERIOR END OF PARKING SPACE
4. CORNERS OF SIGN TO BE RADIUSED 1/2" MINIMUM.

BOTTOM OF SIGNAGE:
WHEN SIGN IS LOCATED IN A PATH OF TRAVEL, BOTTOM OF SIGN SHALL BE A MINIMUM OF 6'-8" ABOVE THE WALKING SURFACE.

WHEN LOCATED IN A LANDSCAPE AREA OR ON A WALL AT THE END OF THE SPACE, THE BOTTOM OF SIGN SHALL BE AT 5'-0" ABOVE ADJACENT GRADE

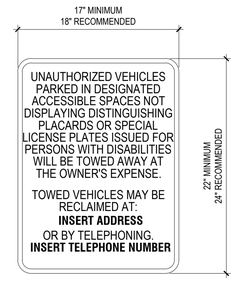

SIGN TYPE C:
UNAUTHORIZED VEHICLE WARNING SIGN

UNAUTHORIZED VEHICLE WARNING SIGNAGE SHALL BE POSTED EITHER:

1. IN A CONSPICUOUS PLACE AT EACH ENTRANCE TO AN OFF-STREET PARKING FACILITY, **OR**
2. IMMEDIATELY ADJACENT TO ON-SITE ACCESSIBLE PARKING AND VISIBLE FROM EACH PARKING SPACE.

THE PHONE NUMBER OR ADDRESS WHERE TOWED VEHICLES CAN BE RECLAIMED IS POSTED IN THE APPROPRIATE LOCATION ON THE SIGN AND IS A PERMANENT PART OF THE SIGN.

LETTERING SHALL BE A MINIMUM OF 1" IN HEIGHT.

16 ACCESSIBLE PARKING SIGNAGE & UNAUTHORIZED VEHICLE SIGNAGE

SCALE: 1 1/2"=1'-0"

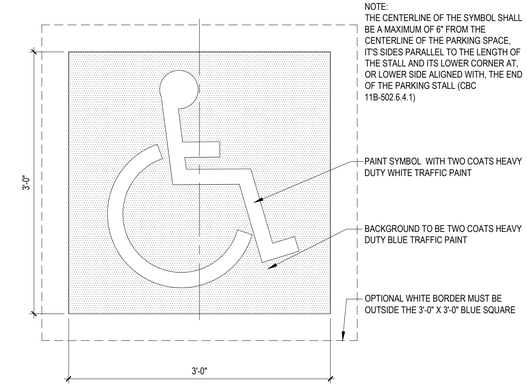

4 ACCESSIBILITY PARKING SYMBOL

SCALE: N.T.S.

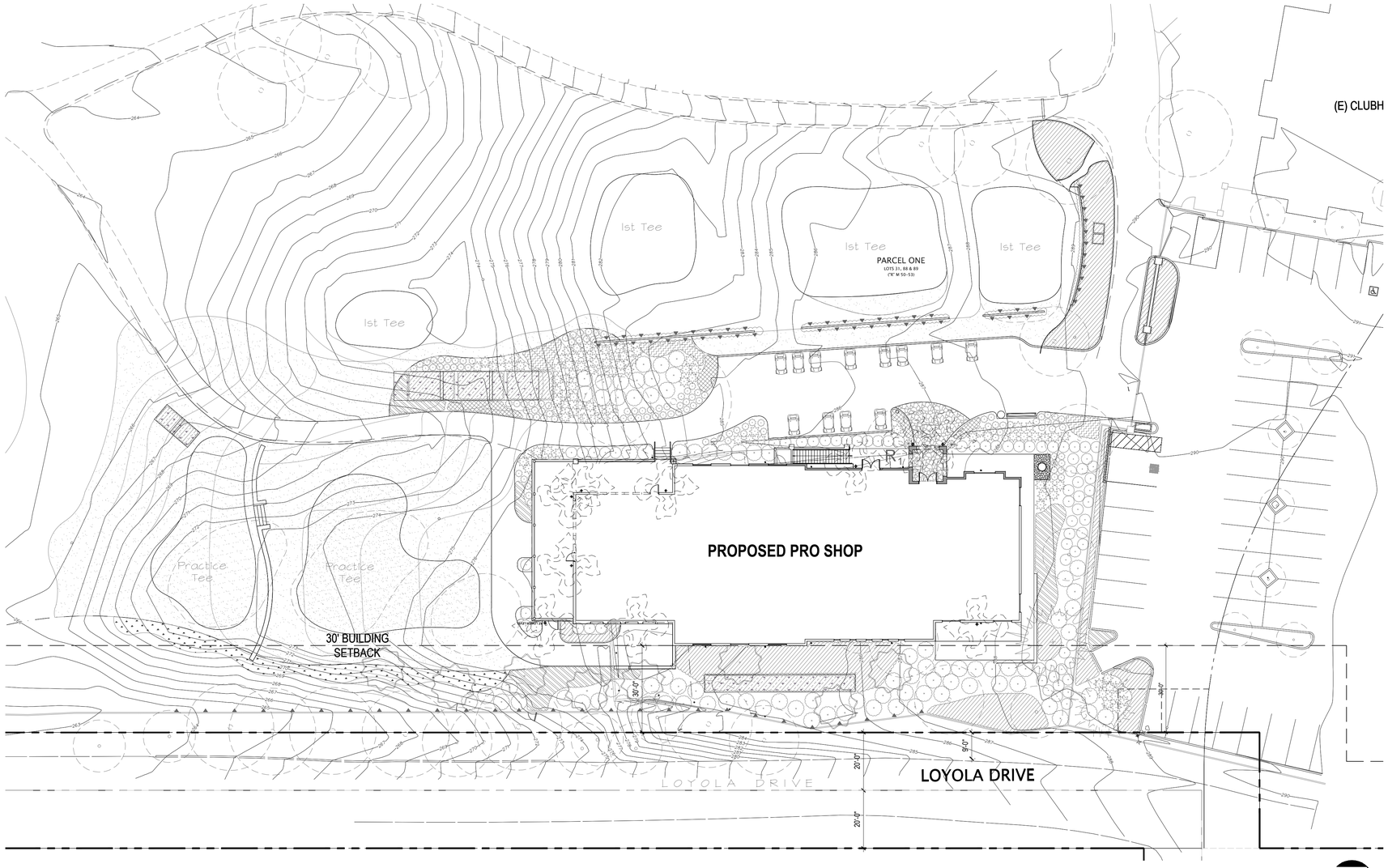

SITE PHOTOMETRIC PLAN

SCALE: 1"= 20' - 0"

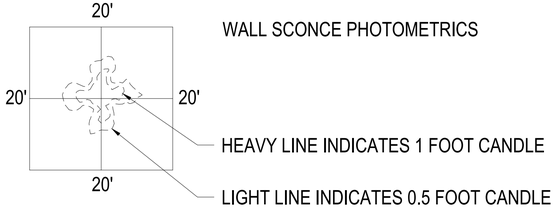

ARC TEC
ARCHITECTURAL TECHNOLOGIES
www.arctecinc.com
Arizona
2960 East Northern Avenue, Building C
Phoenix, AZ 85028 602.953.2355
California
1731 Technology Drive, Suite 750
San Jose, CA 95113 408.496.1121

The "user(s)" in possession of this documentation acknowledge(s) that ARC TEC's and ARC TEC consultants' drawings, specifications, reports, electronic data and other documentation are instruments of service. ARC TEC and ARC TEC consultants shall be deemed the author and owner of such documentation. The "user(s)" in possession of this documentation shall not sue or authorize any other person to use ARC TEC's or ARC TEC consultants' instruments of service. Reuse without ARC TEC's written authorization will be at the user(s) sole risk and without liability to ARC TEC and ARC TEC's consultants. The user(s) possessing this documentation shall indemnify and hold harmless ARC TEC and ARC TEC consultants and their officers and employees from and against all claims, damages losses and expenses, including but not limited to attorneys' fees, arising out of unauthorized reuse of ARC TEC or ARC TEC's consultants instruments of service.
Written dimensions on this drawing shall have precedence over any scaled dimension. DO NOT SCALE THIS DRAWING for accurate dimensions and notify ARC TEC of any discrepancies.

© Copyright ARC TEC, Inc. 2015

In Association with:

An Architectural and Site Approval Application for:
LOS ALTOS GOLF AND COUNTRY CLUB
1560 Country Club Drive
Los Altos, California

Los Altos GOLF AND COUNTRY CLUB

DATE	DESCRIPTION
11.20.2018	COUNTY ASA SUBMITTAL
01.07.2019	COUNTY ASA RESUBMITTAL
02.19.2019	COUNTY ASA RESUBMITTAL

SITE PHOTOMETRIC PLAN

A1.02

PROJECT NO: 154085

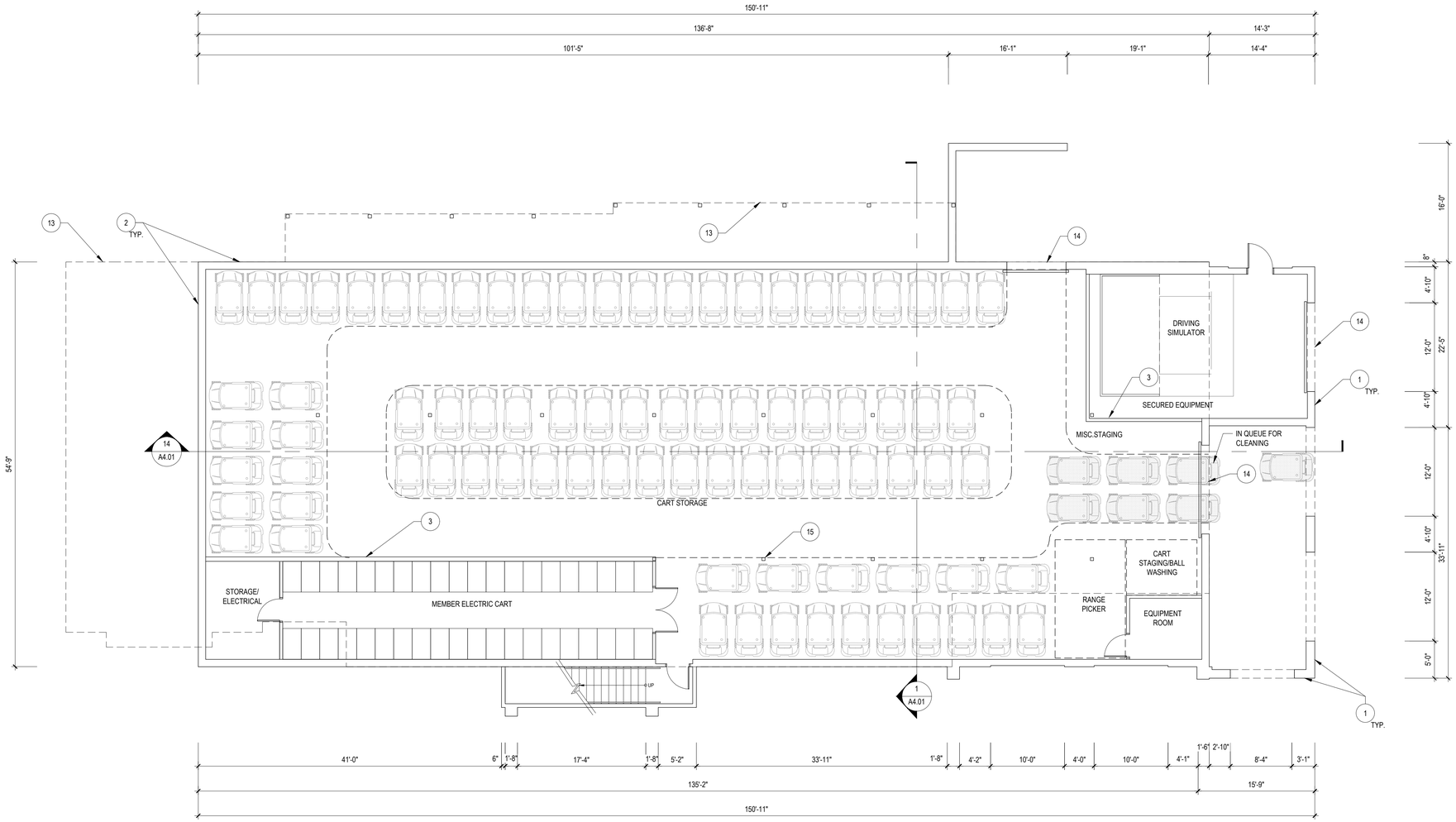

BASEMENT LEVEL FLOOR PLAN

SCALE: 1/8" = 1'-0"

KEY NOTES

NOT ALL KEYNOTES MAY APPLY

1. EXTERIOR STUCCO CLAD WALL
2. CONCRETE FOUNDATION/RETAINING WALL
3. INTERIOR WALL
4. SOLID-CORE EXTERIOR WOOD DOOR - SEE EXTERIOR ELEVATIONS FOR STYLE; MATCH (E) CLUBHOUSE
5. SOLID-CORE INTERIOR WOOD DOOR IN WOOD FRAME; MATCH (E) CLUBHOUSE
6. METAL CLAD WOOD WINDOWS; MATCH (E) CLUBHOUSE
7. DECORATIVE WROUGHT IRON RAILING SYSTEM - 2x2TS NEWEL POSTS, 2-1/4" FORGED STEEL RAIL, 1x1 STEEL BOTTOM RAIL, AND KING ARCHITECTURAL METALS 13-47372-213 & 13-47372-214 ALTERNATING BALUSTERS
8. STUCCO CLAD COLUMN
9. CASHIER COUNTER
10. MILLWORK COUNTER
11. DISPLAY CASE
12. METAL CLAD WOOD NANAWALL WITH INTEGRATED MAN DOOR FOLDING DOORS OR EQUIVALENT
13. OUTLINE OF THE BUILDING ABOVE
14. ROLL-UP DOOR
15. STRUCTURAL COLUMN

NOTE: SEE SHEETS A4.01 AND A4.02 FOR REFERENCE DETAILS TO MATCH (E) CLUBHOUSE

ARC TEC
ARCHITECTURAL TECHNOLOGIES
www.arctecinc.com
Arizona
2960 East Northern Avenue, Building C
Phoenix, AZ 85028 602.953.2355
California
1731 Technology Drive, Suite 750
San Jose, CA 95113 408.496.1121

The "user(s)" in possession of this documentation acknowledge(s) that ARC TEC's and ARC TEC consultants' drawings, specifications, reports, electronic data and other documentation are instruments of service. ARC TEC and ARC TEC consultants shall be deemed the author and owner of such documentation. The "user(s)" in possession of this documentation shall not sue or authorize any other person to use ARC TEC's or ARC TEC consultants' instruments of service. Reuse without ARC TEC's written authorization will be at the user(s) sole risk and without liability to ARC TEC and ARC TEC's consultants. The user(s) possessing this documentation shall indemnify and hold harmless ARC TEC and ARC TEC consultants and their officers and employees from and against all claims, damages losses and expenses, including but not limited to attorneys' fees, arising out of unauthorized reuse of ARC TEC or ARC TEC's consultants instruments of service.
Written dimensions on this drawing shall have precedence over any scaled dimension. DO NOT SCALE THIS DRAWING for accurate dimensions and notify ARC TEC of any discrepancies.

© Copyright ARC TEC, Inc. 2015

In Association with:

An Architectural and Site Approval Application for:

LOS ALTOS GOLF AND COUNTRY CLUB

1560 Country Club Drive
Los Altos, California

Los Altos GOLF AND COUNTRY CLUB

DATE	DESCRIPTION
11.20.2018	COUNTY ASA SUBMITTAL
01.07.2019	COUNTY ASA RESUBMITTAL
02.19.2019	COUNTY ASA RESUBMITTAL

BASEMENT LEVEL FLOOR PLAN

A2.11

PROJECT NO: 154085

P:\2015 Jobs\154085 Los Altos Golf and Country Club\01-Planning\02-Arch\15-Set Comp ASA Submittal\154085-A211.dwg - Feb 19, 2019, 8:22am - dpierce

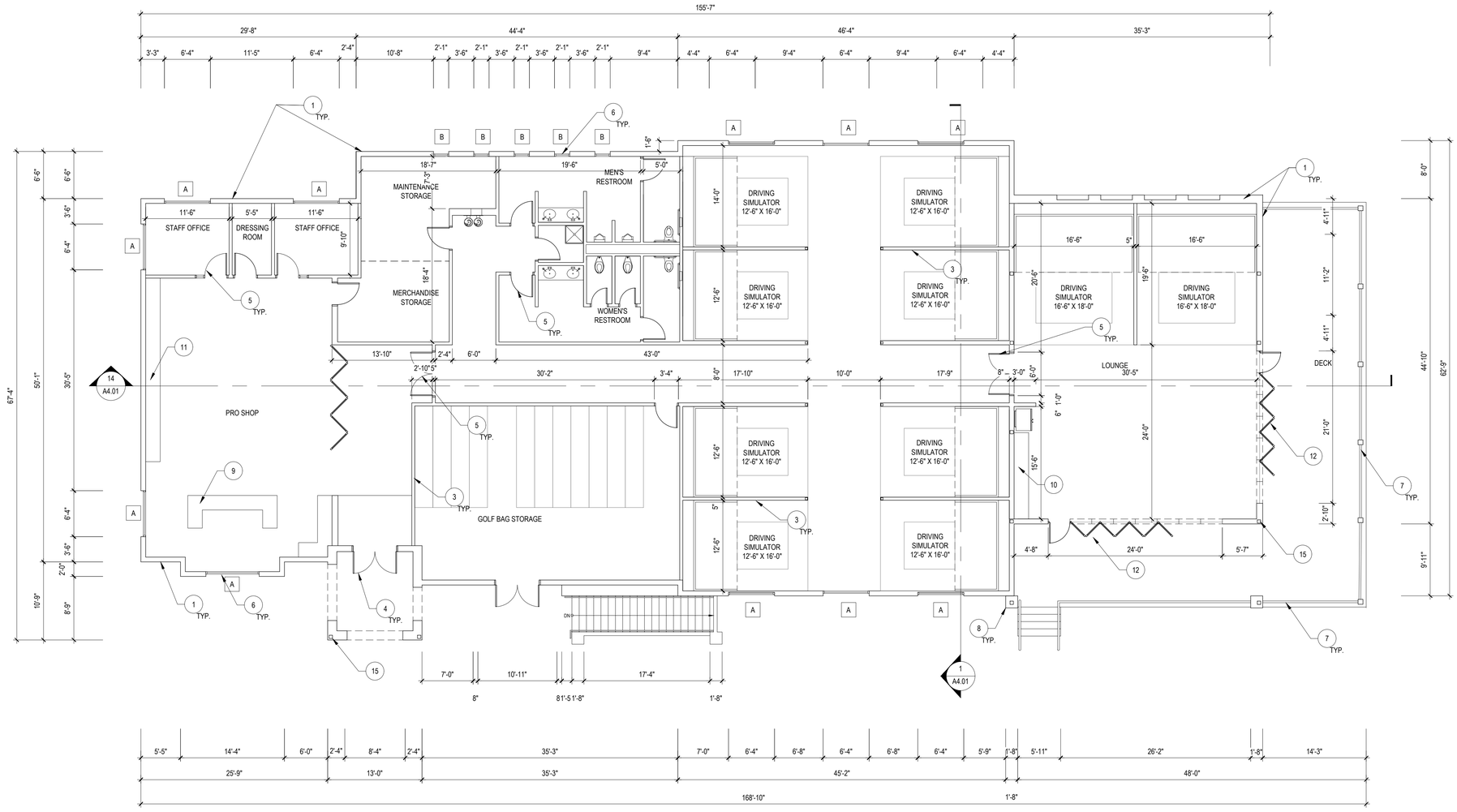

FIRST LEVEL FLOOR PLAN

SCALE: 1/8" = 1'-0"

KEY NOTES

NOT ALL KEYNOTES MAY APPLY

1. EXTERIOR STUCCO CLAD WALL
2. CONCRETE FOUNDATION/RETAINING WALL
3. INTERIOR WALL
4. SOLID-CORE EXTERIOR WOOD DOOR - SEE EXTERIOR ELEVATIONS FOR STYLE; MATCH (E) CLUBHOUSE
5. SOLID-CORE INTERIOR WOOD DOOR IN WOOD FRAME; MATCH (E) CLUBHOUSE
6. METAL CLAD WOOD WINDOWS; MATCH (E) CLUBHOUSE
7. DECORATIVE WROUGHT IRON RAILING SYSTEM - 2x2TS NEWEL POSTS, 2-1/4" FORGED STEEL RAIL, 1x1 STEEL BOTTOM RAIL, AND KING ARCHITECTURAL METALS 13-47372-213 & 13-47372-214 ALTERNATING BALUSTERS
8. STUCCO CLAD COLUMN
9. CASHIER COUNTER
10. MILLWORK COUNTER
11. DISPLAY CASE
12. METAL CLAD WOOD NANAWALL WITH INTEGRATED MAN DOOR FOLDING DOORS OR EQUIVALENT
13. OUTLINE OF THE BUILDING ABOVE
14. ROLL-UP DOOR
15. STRUCTURAL COLUMN

NOTE: SEE SHEETS A4.01 AND A4.02 FOR REFERENCE DETAILS TO MATCH (E) CLUBHOUSE

ARC TEC
ARCHITECTURAL TECHNOLOGIES
www.arctecinc.com
Arizona
2960 East Northern Avenue, Building C
Phoenix, AZ 85028 602.953.2355
California
1731 Technology Drive, Suite 750
San Jose, CA 95113 408.496.1121

The "user(s)" in possession of this documentation acknowledge(s) that ARC TEC's and ARC TEC consultants' drawings, specifications, reports, electronic data and other documentation are instruments of service. ARC TEC and ARC TEC consultants shall be deemed the author and owner of such documentation. The "user(s)" in possession of this documentation shall not sue or authorize any other person to use ARC TEC's or ARC TEC consultants' instruments of service. Reuse without ARC TEC's written authorization will be at the user(s) sole risk and without liability to ARC TEC and ARC TEC's consultants. The user(s) possessing this documentation shall indemnify and hold ARC TEC and ARC TEC's consultants harmless and defend their employees from and against all claims, damages losses and expenses, including but not limited to attorneys' fees, arising out of unauthorized reuse of ARC TEC or ARC TEC's consultants instruments of service.
Written dimensions on this drawing shall have precedence over any scaled dimension. DO NOT SCALE THIS DRAWING for accurate dimensions and notify ARC TEC of any discrepancies.

© Copyright ARC TEC, Inc. 2015

In Association with:

An Architectural and Site Approval Application for:

LOS ALTOS GOLF AND COUNTRY CLUB

1560 Country Club Drive
Los Altos, California

Los Altos Golf and Country Club

DATE	DESCRIPTION
11.20.2018	COUNTY ASA SUBMITTAL
01.07.2019	COUNTY ASA RESUBMITTAL
02.19.2019	COUNTY ASA RESUBMITTAL

FIRST LEVEL FLOOR PLAN

A2.12

PROJECT NO: 154085

P:\2015 Jobs\154085 Los Altos Golf and Country Club\01 Planning\PD\A2.01 & 02 Plans - Site 18, 2019, 8:12am - dhong

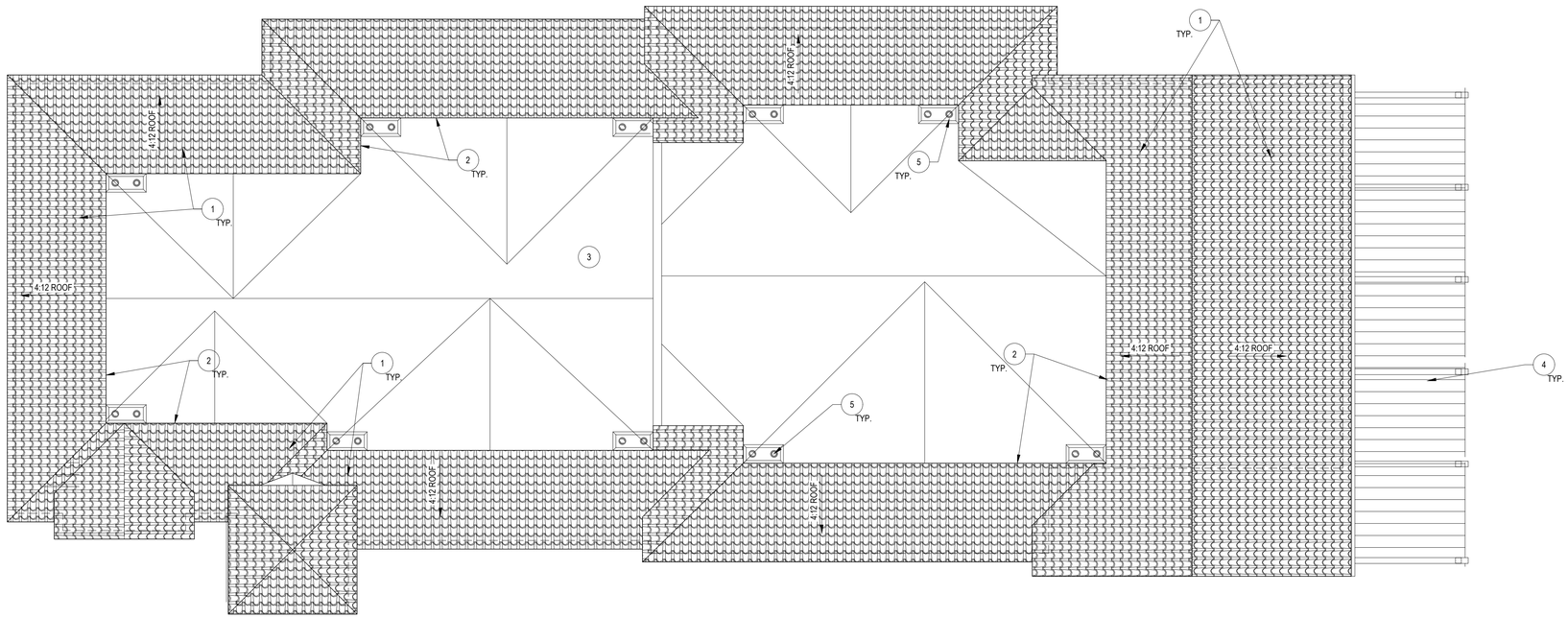

ROOF PLAN

SCALE: 1/8" = 1'-0"

KEY NOTES

1. 4:12 SLOPED ROOF WITH SPANISH TILE TO MATCH EXISTING (E) CLUBHOUSE BORAL ROOFING: EL CAMINO BLEND
2. RIDGE AT ROOF WELL, SEE DETAIL 20/A4.01 FOR REFERENCE
3. SINGLE PLY ADHERED MEMBRANE ROOFING SYSTEM
4. DECORATIVE WOOD TRELLIS, PAINT: KELLY MOORE 417 OXFORD BROWN TO MATCH EXISTING CLUB HOUSE TRELLISES
5. ROOF DRAIN & OVERFLOW

NOTE: ALL SLOPED ROOF SECTIONS WITH SPANISH TILE TO HAVE CONTINUOUS ROOF GUTTERS AND DOWNSPOUTS AS REQUIRED

NOTE: SEE SHEETS A4.01 AND A4.02 FOR REFERENCE DETAILS TO MATCH (E) CLUBHOUSE

ARC TEC
ARCHITECTURAL TECHNOLOGIES
www.arctecinc.com
Arizona
2960 East Northern Avenue, Building C
Phoenix, AZ 85028 602.953.2355
California
1731 Technology Drive, Suite 750
San Jose, CA 95113 408.496.1121

The "user(s)" in possession of this documentation acknowledge(s) that ARC TEC's and ARC TEC consultants' drawings, specifications, reports, electronic data and other documentation are instruments of service. ARC TEC and ARC TEC consultants shall be deemed the author and owner of such documentation. The "user(s)" in possession of this documentation shall not sue or authorize any other person to use ARC TEC's or ARC TEC consultants' instruments of service. Reuse without ARC TEC's written authorization will be at the user(s) sole risk and without liability to ARC TEC and ARC TEC's consultants. The user(s) possessing this documentation shall indemnify and hold harmless ARC TEC and ARC TEC consultants and their officers and employees from and against all claims, damages losses and expenses, including but not limited to attorneys' fees, arising out of unauthorized reuse of ARC TEC or ARC TEC's consultants instruments of service.
Written dimensions on this drawing shall have precedence over any scaled dimension. DO NOT SCALE THIS DRAWING for accurate dimensions and notify ARC TEC of any discrepancies.

© Copyright ARC TEC, Inc. 2015

In Association with:

An Architectural and Site Approval Application for:
LOS ALTOS GOLF AND COUNTRY CLUB
1560 Country Club Drive
Los Altos, California

Los Altos Golf and Country Club

DATE	DESCRIPTION
11.20.2018	COUNTY ASA SUBMITTAL
01.07.2019	COUNTY ASA RESUBMITTAL
02.19.2019	COUNTY ASA RESUBMITTAL

ROOF PLAN

A2.31

PROJECT NO: 154085

P:\2015-Jobs\14085-Los Altos Golf and Country Club\01-Drawings\2015\15-04 County ASA Submittal\14085-A207.dwg Feb 19, 2015, 8:43am dwang

NORTH ELEVATION (1)

SCALE: 1/8" = 1'-0"

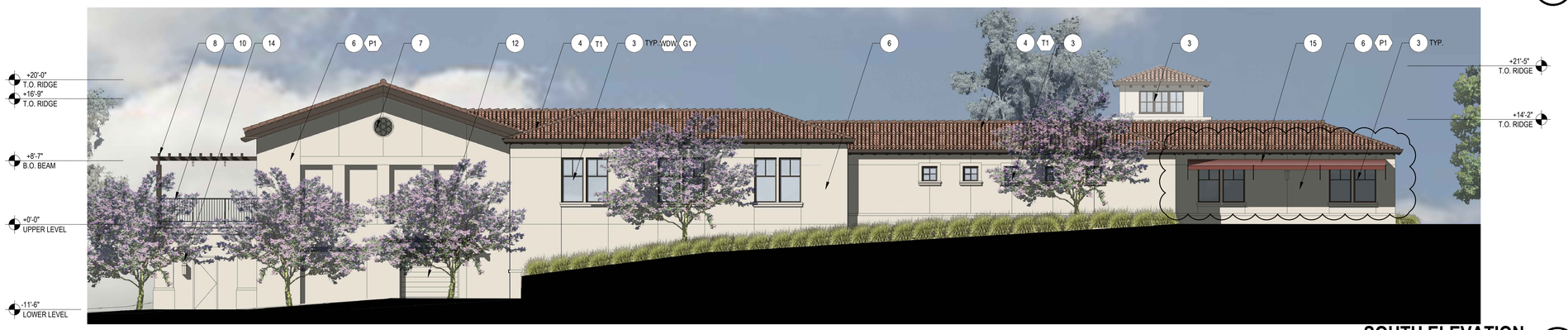

SOUTH ELEVATION (2)

SCALE: 1/8" = 1'-0"

MATERIAL PALETTE

G1	GLAZING*: TYPE: COLOR:	MATCH EXISTING CLUBHOUSE 1" INSULATED LOW TINT
P1	PAINT OVER STUCCO TO MATCH EXISTING CLUBHOUSE	
T1	CLAY ROOF TILE: MANUFACTURER: SERIES:	MATCH EXISTING CLUBHOUSE BORAL ROOFING EL CAMINO BLEND
W1	WOOD STAIN: MANUFACTURER: COLOR:	MATCH EXISTING CLUBHOUSE KELLY MOORE REDWOOD STAIN
W2	WOOD PAINT: MANUFACTURER: COLOR:	MATCH EXISTING CLUBHOUSE KELLY MOORE 417 OXFORD BROWN
WDW	METAL CLAD WINDOWS: MANUFACTURER: TYPE: COLOR:	MATCH EXISTING CLUBHOUSE JELD WEN WINDOWS AND DOORS SITELINE EX CLAD CASEMENT, AURALAST PINE DARK CHOCOLATE EXTERIOR NATURAL INTERIOR
M1	WROUGHT IRON RAILING: COLOR:	MATCH EXISTING CLUBHOUSE BLACK

* GLAZING SPECIFIED INDICATES GENERAL TONE AND COLOR. FINAL PERCEIVED COLOR AND CLARITY WILL VARY DEPENDING ON 1" INSULATED GLAZING SPECIFICATION TO BE DETERMINED AT TIME OF CONSTRUCTION DOCUMENTATION.

KEY NOTES

NOT ALL KEYNOTES MAY APPLY

1. WOOD ENTRY DOOR TO MATCH EXISTING MAIN CLUBHOUSE
2. METAL CLAD WOOD NANAWALL FOLDING DOORS OR EQUIVALENT
3. METAL CLAD WOOD WINDOW TO MATCH EXISTING MAIN CLUBHOUSE
4. CLAY TILE ROOF TO MATCH EXISTING MAIN CLUBHOUSE
5. STAINED WOOD FASCIA TO MATCH EXISTING MAIN CLUBHOUSE
6. 3-COAT CEMENT PLASTER STUCCO SYSTEM W/ ELASTOMERIC COATING
7. CLAY VENT TO MATCH EXISTING MAIN CLUBHOUSE
8. STAINED WOOD TRELLIS TO MATCH EXISTING MAIN CLUBHOUSE
9. STUCCO CORBEL AND ARCH TO MATCH EXISTING MAIN CLUBHOUSE
10. DECORATIVE WROUGHT IRON RAILING SYSTEM - 2x2TS NEWEL POSTS, 2-1/4" FORGED STEEL RAIL, 1x1 STEEL BOTTOM RAIL, AND KING ARCHITECTURAL METALS 13-4732-213 & 13-47372-214 ALTERNATING BALUSTERS)
11. CONCRETE FOUNDATION/RETAINING WALL
12. ROLL-UP GARAGE DOOR
13. HOLLOW METAL DOOR PAINTED TO MATCH BUILDING EXTERIOR
14. WALL SCONCE: BLACK MEDIUM OUTDOOR SEEDED GLASS DUSK TO DAWN WALL LANTERN MODEL # KB 06005-DEL
15. CANVAS AWNING TO MATCH EXISTING MAIN CLUBHOUSE

NOTE: SEE SHEETS A4.01 AND A4.02 FOR REFERENCE DETAILS TO MATCH (E) CLUBHOUSE

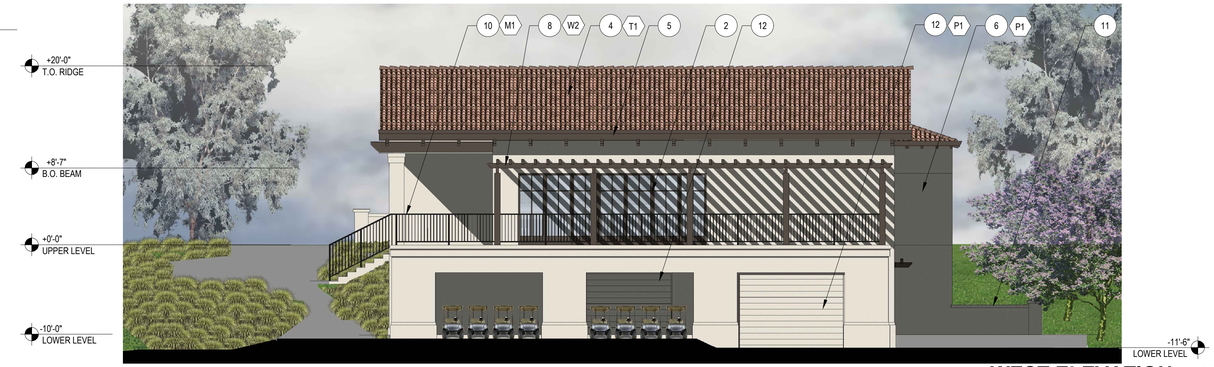

WEST ELEVATION (3)

SCALE: 1/8" = 1'-0"

EAST ELEVATION (4)

SCALE: 1/8" = 1'-0"

ARC TEC
ARCHITECTURAL TECHNOLOGIES
www.arctecinc.com
Arizona
2960 East Northern Avenue, Building C
Phoenix, AZ 85028 602.953.2355
California
1731 Technology Drive, Suite 750
San Jose, CA 95113 408.496.1121

The "user(s)" in possession of this documentation acknowledge(s) that ARC TEC's and ARC TEC consultants' instruments of service (including electronic) and other documentation are instruments of service. ARC TEC and ARC TEC consultants shall be deemed the author and owner of such documentation. The "user(s)" in possession of this documentation shall not sue or authorize any other person to use ARC TEC's or ARC TEC consultants' instruments of service. Reuse without ARC TEC's written authorization will be at the user(s) sole risk and without liability to ARC TEC and ARC TEC's consultants. The "user(s)" in possession of this documentation shall indemnify and hold harmless ARC TEC and ARC TEC's consultants and agents and employees from and against all claims, damages, losses, and expenses, including but not limited to attorneys' fees, arising out of unauthorized reuse of ARC TEC or ARC TEC's consultants instruments of service.
Written dimensions on this drawing shall have precedence over any scaled dimension. DO NOT SCALE THIS DRAWING for accurate dimensions and notify ARC TEC of any discrepancies.

© Copyright ARC TEC, Inc. 2015

In Association with:

An Architectural and Site Approval Application for:

LOS ALTOS GOLF AND COUNTRY CLUB

1560 Country Club Drive
Los Altos, California

Los Altos Golf and Country Club

DATE	DESCRIPTION
11.20.2018	COUNTY ASA SUBMITTAL
01.07.2019	COUNTY ASA RESUBMITTAL
02.19.2019	COUNTY ASA RESUBMITTAL

EXTERIOR ELEVATIONS

A3.11

PROJECT NO: 154085

P:\2015 Jobs\154085 Los Altos Golf and Country Club\01 Planning\2018-2019 3rd County ASA Submittal\154085-A3.11.dwg - Feb 19, 2019, 9:33am - dennisg

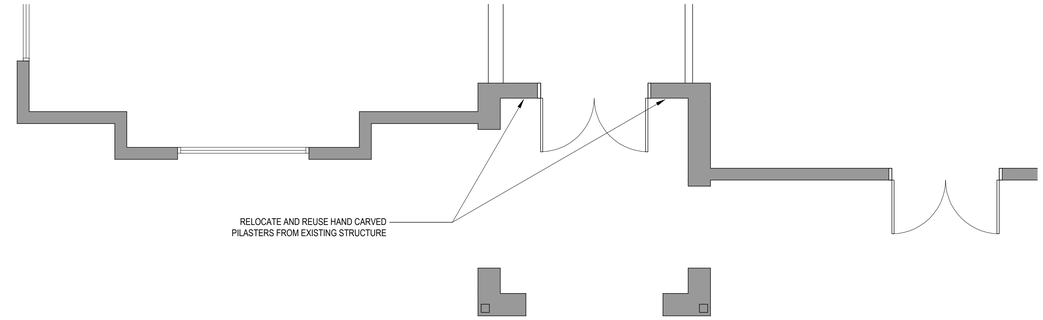

ENLARGED ENTRY TOWER PLAN (1)

SCALE: 1/4" = 1'-0"

ENLARGED ENTRY TOWER ELEVATION (3)

SCALE: 1/4" = 1'-0"

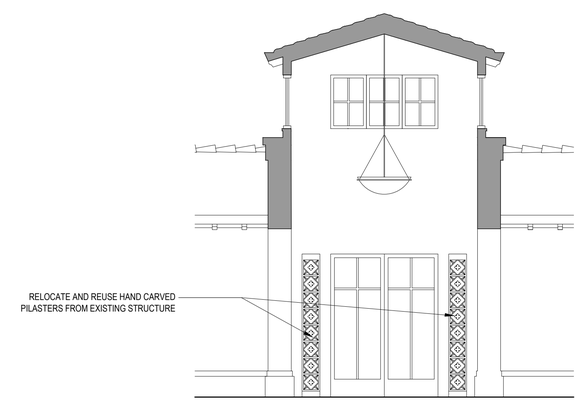

ENTRY TOWER SECTION (4)

SCALE: 1/4" = 1'-0"

ARC TEC
ARCHITECTURAL TECHNOLOGIES
www.arctecinc.com
Arizona
2960 East Northern Avenue, Building C
Phoenix, AZ 85028 602.953.2355
California
1731 Technology Drive, Suite 750
San Jose, CA 95113 408.496.1121

The "user(s)" in possession of this documentation acknowledge(s) that ARC TEC's and ARC TEC's consultants' instruments of service, including electronic files and other documentation are instruments of service. ARC TEC and ARC TEC consultants shall be deemed the author and owner of such documentation. The "user(s)" in possession of this documentation shall not sue or authorize any other person to use ARC TEC's or ARC TEC consultants' instruments of service. Reuse without ARC TEC's written authorization will be at the user(s) sole risk and without liability to ARC TEC and ARC TEC's consultants. The "user(s)" in possession of this documentation shall indemnify and hold harmless ARC TEC and ARC TEC's consultants and agents and employees from and against all claims, damages, losses, and expenses, including but not limited to attorneys' fees, arising out of unauthorized reuse of ARC TEC or ARC TEC's consultants instruments of service.
Written dimensions on this drawing shall have precedence over any scaled dimension. DO NOT SCALE THIS DRAWING for accurate dimensions and notify ARC TEC of any discrepancies.

© Copyright ARC TEC, Inc. 2015

In Association with:

An Architectural and Site Approval Application for:

LOS ALTOS GOLF AND COUNTRY CLUB

1560 Country Club Drive
Los Altos, California

Los Altos Golf and Country Club

DATE	DESCRIPTION
11.20.2018	COUNTY ASA SUBMITTAL
01.07.2019	COUNTY ASA RESUBMITTAL
02.19.2019	COUNTY ASA RESUBMITTAL

ENLARGED ENTRY TOWER
ELEVATION AND SECTION

A3.12

PROJECT NO: 154085

P:\2018-JOB\154085 Los Altos Golf and Country Club\07-Planning\2019-02-19 340 County ASA Update\154085-A317.dwg - Feb 19, 2019, 9:39am - dwong

CURRENT VIEW FROM FIRST TEE

FUTURE VIEW FROM FIRST TEE

CURRENT VIEW FROM FIRST FAIRWAY

FUTURE VIEW FROM FIRST FAIRWAY

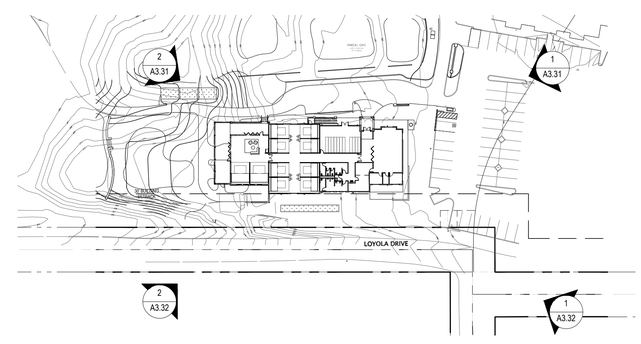

REFERENCE SITE PLAN

SCALE: 1/64" = 1'-0"

ARC TEC
ARCHITECTURAL TECHNOLOGIES
www.arctecinc.com
Arizona
2960 East Northern Avenue, Building C
Phoenix, AZ 85028 602.953.2355
California
1731 Technology Drive, Suite 750
San Jose, CA 95113 408.496.1121

The "user(s)" in possession of this documentation acknowledge(s) that ARC TEC's and ARC TEC consultants' drawings, specifications, reports, electronic data and other documentation are instruments of service. ARC TEC and ARC TEC consultants shall be deemed the author and owner of such documentation. The "user(s)" in possession of this documentation shall not sue or authorize any other person to use ARC TEC's or ARC TEC consultants' instruments of service. Reuse without ARC TEC's written authorization will be at the user(s) sole risk and without liability to ARC TEC and ARC TEC's consultants. The user(s) possessing this documentation shall indemnify and hold harmless ARC TEC and ARC TEC consultants and their officers and employees from and against all claims, damages losses and expenses, including but not limited to attorneys' fees, arising out of unauthorized reuse of ARC TEC or ARC TEC's consultants instruments of service.

Written dimensions on this drawing shall have precedence over any scaled dimension. DO NOT SCALE THIS DRAWING for accurate dimensions and notify ARC TEC of any discrepancies.

© Copyright ARC TEC, Inc. 2015

In Association with:

An Architectural and Site Approval Application for:

LOS ALTOS GOLF AND COUNTRY CLUB

1560 Country Club Drive
Los Altos, California

Los Altos GOLF AND COUNTRY CLUB

DATE	DESCRIPTION
11.20.2018	COUNTY ASA SUBMITTAL
01.07.2019	COUNTY ASA RESUBMITTAL
02.19.2019	COUNTY ASA RESUBMITTAL

EXTERIOR RENDERINGS

A3.31

PROJECT NO: 154085

1

CURRENT VIEW FROM LOYOLA DRIVE HEADING WEST

1

FUTURE VIEW FROM LOYOLA DRIVE HEADING WEST

2

CURRENT VIEW FROM LOYOLA DRIVE HEADING EAST

2

FUTURE VIEW FROM LOYOLA DRIVE HEADING EAST

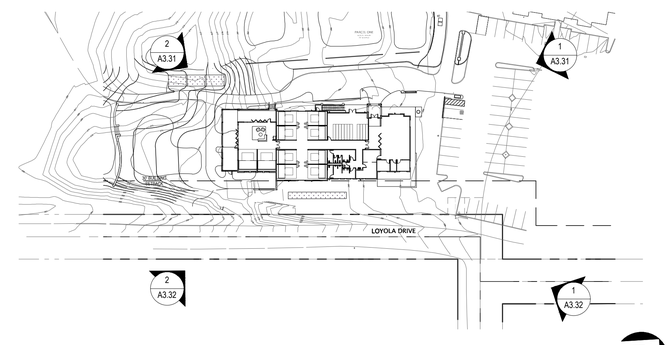

REFERENCE SITE PLAN

SCALE: 1/64" = 1'-0"

ARC TEC
ARCHITECTURAL TECHNOLOGIES
www.arctecinc.com
Arizona
2960 East Northern Avenue, Building C
Phoenix, AZ 85028 602.953.2355
California
1731 Technology Drive, Suite 750
San Jose, CA 95113 408.496.1121

The "user(s)" in possession of this documentation acknowledge(s) that ARC TEC's and ARC TEC consultants' drawings, specifications, reports, electronic data and other documentation are instruments of service. ARC TEC and ARC TEC consultants shall be deemed the author and owner of such documentation. The "user(s)" in possession of this documentation shall not sue or authorize any other person to use ARC TEC's or ARC TEC consultants' instruments of service. Reuse without ARC TEC's written authorization will be at the user(s) sole risk and without liability to ARC TEC and ARC TEC's consultants. The user(s) possessing this documentation shall indemnify and hold harmless ARC TEC and ARC TEC consultants and their officers and employees from and against all claims, damages losses and expenses, including but not limited to attorneys' fees, arising out of unauthorized reuse of ARC TEC or ARC TEC's consultants instruments of service.
Written dimensions on this drawing shall have precedence over any scaled dimension. DO NOT SCALE THIS DRAWING for accurate dimensions and notify ARC TEC of any discrepancies.

© Copyright ARC TEC, Inc. 2015

In Association with:

An Architectural and Site Approval Application for:

LOS ALTOS GOLF AND COUNTRY CLUB

1560 Country Club Drive
Los Altos, California

Los Altos Golf and Country Club

DATE	DESCRIPTION
11.20.2018	COUNTY ASA SUBMITTAL
01.07.2019	COUNTY ASA RESUBMITTAL
02.19.2019	COUNTY ASA RESUBMITTAL

EXTERIOR RENDERINGS

A3.32

PROJECT NO: 154085

P:\2015 Jobs\154085 Los Altos Golf and Country Club\01 Planning\02 Bldg Dept Comm ASA Submittal\154085-A331.dwg Feb 19, 2019, 3:08pm dwang

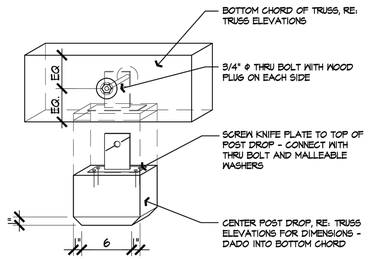

DECORATIVE TRUSS DROP (17)

SCALE: NTS

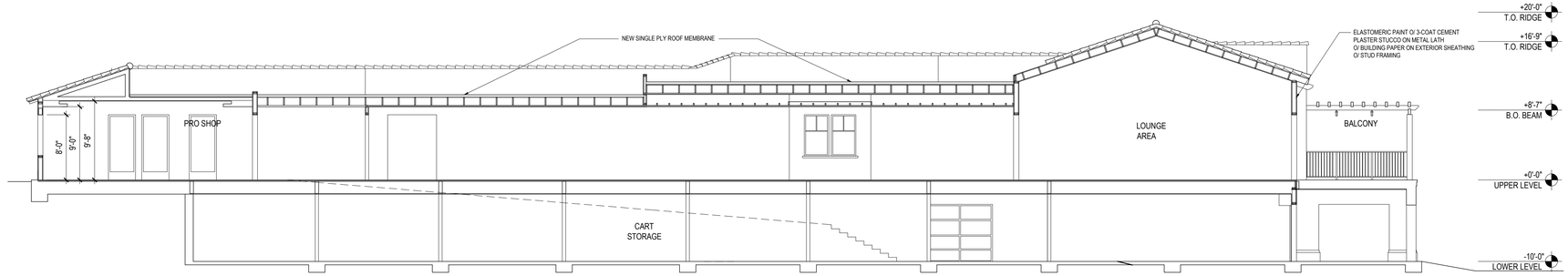

BUILDING SECTION (1)

SCALE: 1/8" = 1'-0"

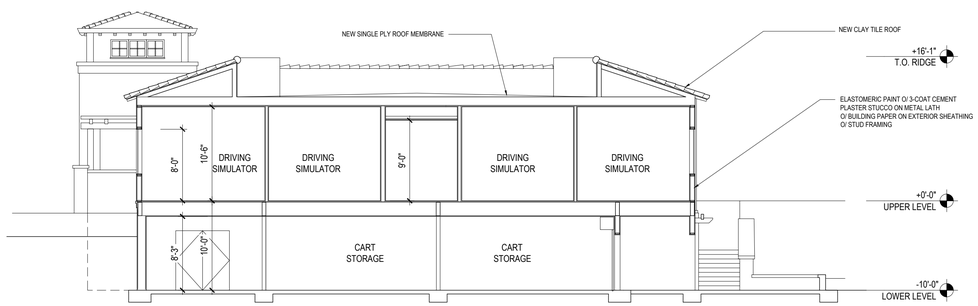

BUILDING SECTION (10)

SCALE: 1/8" = 1'-0"

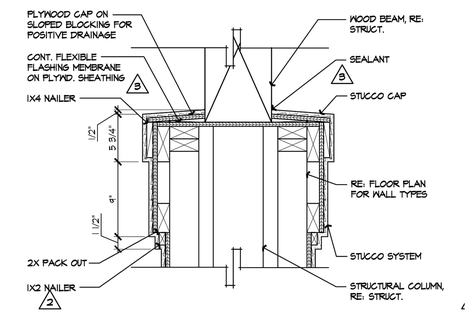

COLUMN CAP DETAIL (6)

SCALE: NTS

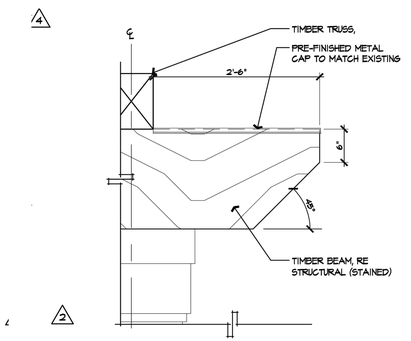

TYP. END CUT AT TRELLIS BEAM (2)

SCALE: NTS

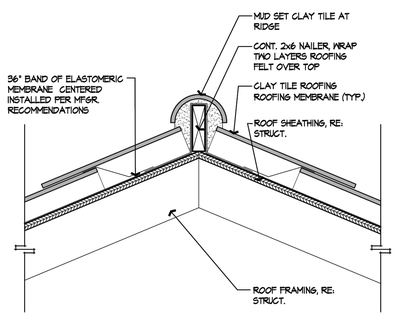

TYP. RIDGE/HIP (19)

SCALE: NTS

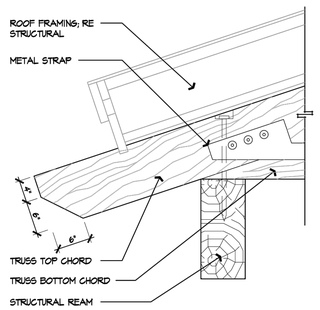

TOP CHORD TIMBER TRUSS DETAIL (15)

SCALE: NTS

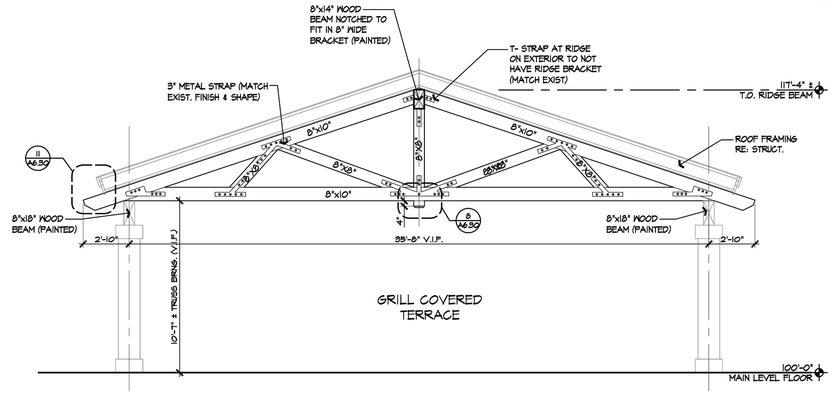

TIMBER TRUSS ELEVATION - SIMILAR (7)

SCALE: NTS

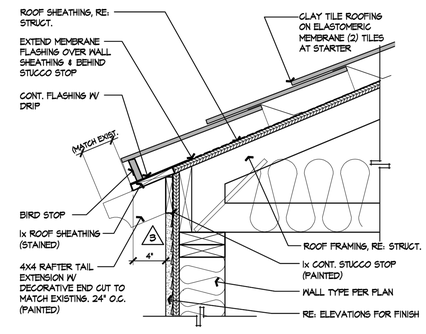

TYP. EAVE DETAIL (3)

SCALE: NTS

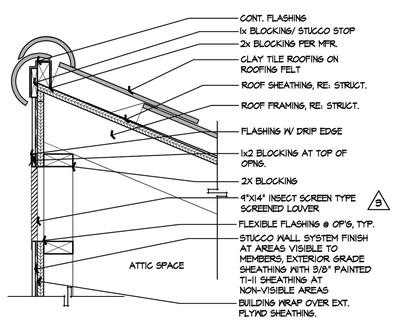

TYP. RIDGE AT ROOF WELL (20)

SCALE: NTS

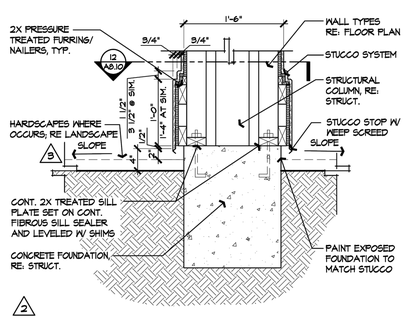

COLUMN BASE DETAIL (16)

SCALE: NTS

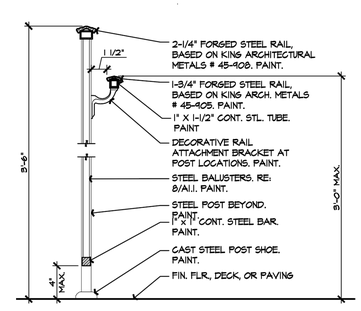

STEEL GUARD RAIL/HANDRAIL (12)

SCALE: NTS

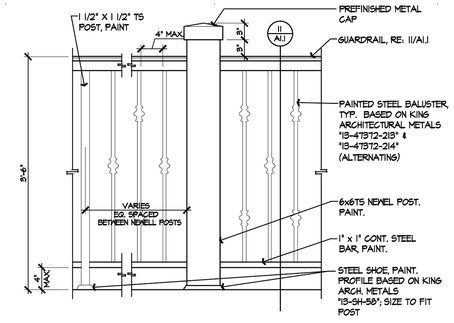

GUARD RAIL (8)

SCALE: NTS

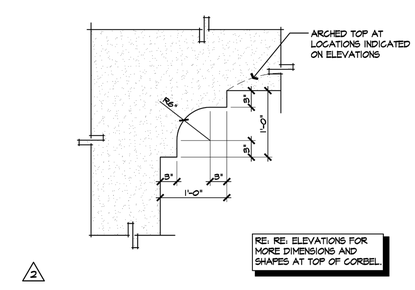

TYP. STUCCO CORBEL (4)

SCALE: NTS

ARC TEC
ARCHITECTURAL TECHNOLOGIES
www.arctecinc.com
Arizona
2960 East Northern Avenue, Building C
Phoenix, AZ 85028 602.953.2355
California
1731 Technology Drive, Suite 750
San Jose, CA 95113 408.496.1121

The "user(s)" in possession of this documentation acknowledge(s) that ARC TEC's and ARC TEC consultants' drawings, specifications, reports, electronic data and other documentation are instruments of service. ARC TEC and ARC TEC consultants shall be deemed the author and owner of such documentation. The "user(s)" in possession of this documentation shall not sue or authorize any other person to use ARC TEC's or ARC TEC consultants' instruments of service. Reuse without ARC TEC's written authorization will be at the user(s) sole risk and without liability to ARC TEC and ARC TEC's consultants. The user(s) possessing this documentation shall indemnify and hold harmless ARC TEC and ARC TEC consultants and their officers and employees from and against all claims, damages losses and expenses, including but not limited to attorneys' fees, arising out of unauthorized reuse of ARC TEC or ARC TEC's consultants instruments of service.
Written dimensions on this drawing shall have precedence over any scaled dimension. DO NOT SCALE THIS DRAWING for accurate dimensions and notify ARC TEC of any discrepancies.

© Copyright ARC TEC, Inc. 2015

In Association with:

An Architectural and Site Approval Application for:

LOS ALTOS GOLF AND COUNTRY CLUB

1560 Country Club Drive
Los Altos, California

Los Altos GOLF AND COUNTRY CLUB

DATE	DESCRIPTION
11.20.2018	COUNTY ASA SUBMITTAL
01.07.2019	COUNTY ASA RESUBMITTAL
02.19.2019	COUNTY ASA RESUBMITTAL

BUILDING SECTIONS AND DETAILS

A4.01

PROJECT NO: 154085

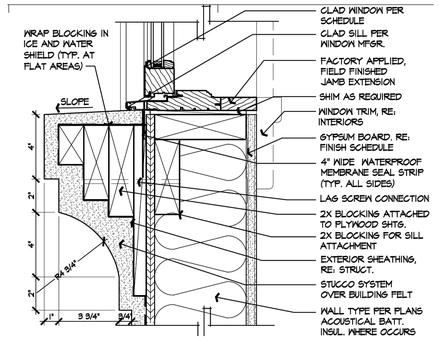

WINDOW SILL AT STUCCO PACK OUT 13

SCALE: NTS

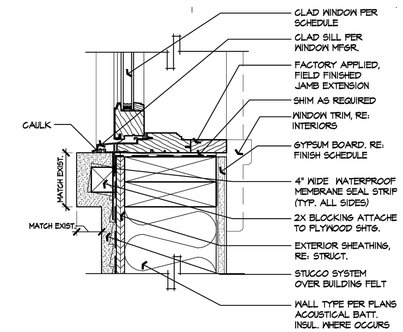

WINDOW SILL AT STUCCO PACK OUT 9

SCALE: NTS

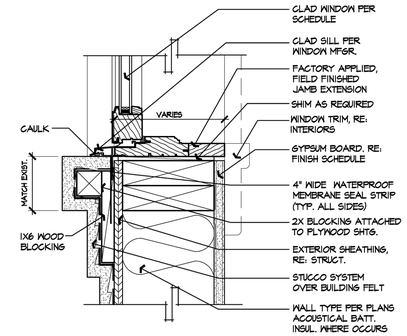

WINDOW SILL AT STUCCO PACK OUT 5

SCALE: NTS

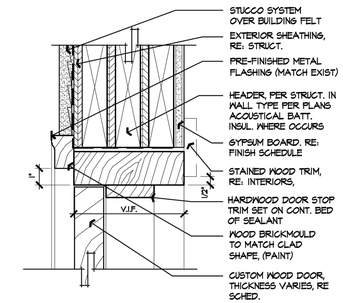

DOOR HEAD AT WOOD DOOR 1

SCALE: NTS

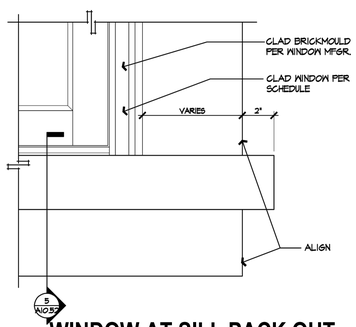

WINDOW AT SILL PACK OUT FOR DETAIL 5 14

SCALE: NTS

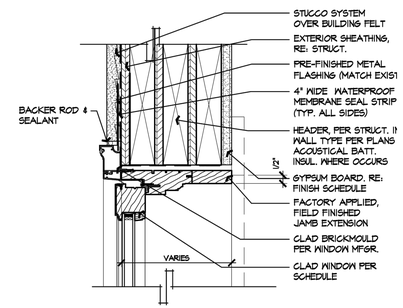

WINDOW HEAD AT STUCCO 10

SCALE: NTS

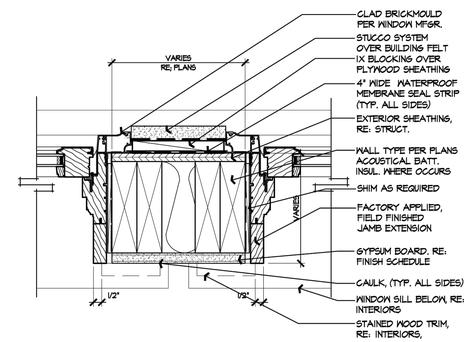

WINDOW JAMB AT STUCCO PACK OUT 6

SCALE: NTS

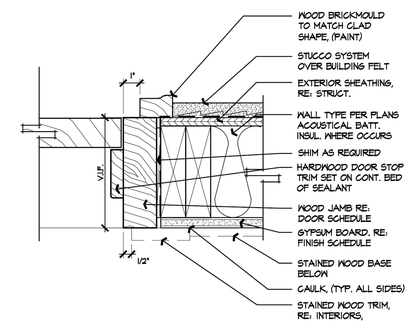

DOOR JAMB AT WOOD DOOR 2

SCALE: NTS

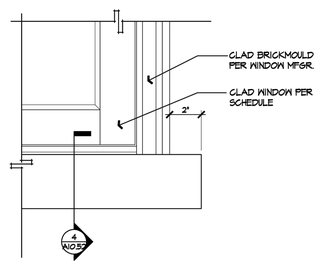

WINDOW AT SILL PACK OUT FOR DETAIL 9 15

SCALE: NTS

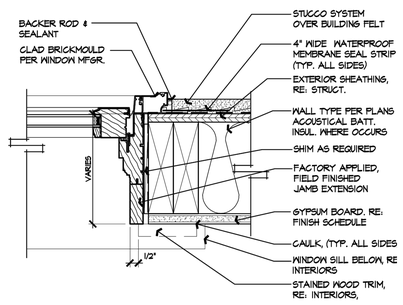

WINDOW JAMB AT STUCCO 11

SCALE: NTS

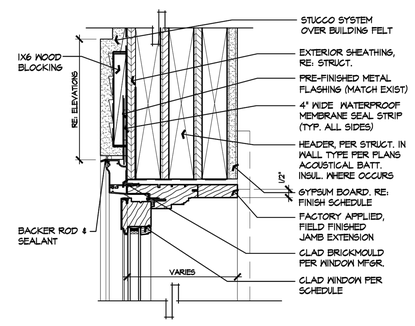

WINDOW HEAD AT STUCCO PACK OUT 7

SCALE: NTS

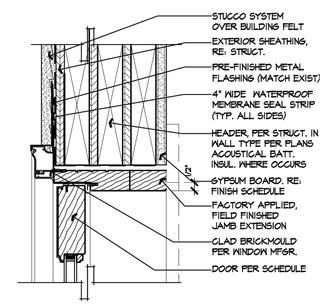

DOOR HEAD AT CLAD DOOR 3

SCALE: NTS

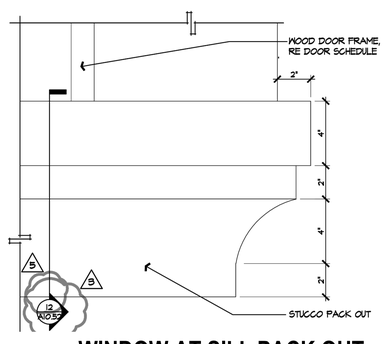

WINDOW AT SILL PACK OUT 16

SCALE: NTS

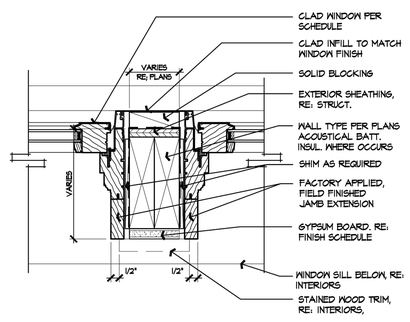

WINDOW JAMB AT CLAD MULL 12

SCALE: NTS

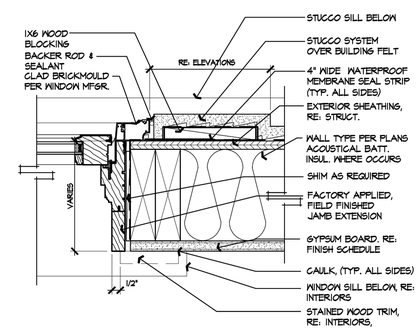

WINDOW JAMB AT STUCCO PACK OUT 8

SCALE: NTS

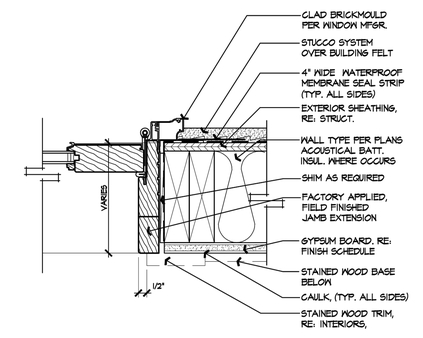

DOOR JAMB AT CLAD DOOR 4

SCALE: NTS

ARC TEC
ARCHITECTURAL TECHNOLOGIES
www.arctecinc.com
Arizona
2960 East Northern Avenue, Building C
Phoenix, AZ 85028 602.953.2355
California
1731 Technology Drive, Suite 750
San Jose, CA 95113 408.496.1121

The "user(s)" in possession of this documentation acknowledge(s) that ARC TEC's and ARC TEC consultants' drawings, specifications, reports, electronic data and other documentation are instruments of service. ARC TEC and ARC TEC consultants shall be deemed the author and owner of such documentation. The "user(s)" in possession of this documentation shall not sue or authorize any other person to use ARC TEC's or ARC TEC consultants' instruments of service. Reuse without ARC TEC's written authorization will be at the user(s) sole risk and without liability to ARC TEC and ARC TEC's consultants. The user(s) possessing this documentation shall indemnify and hold harmless ARC TEC and ARC TEC's consultants and their employees from and against all claims, damages losses and expenses, including but not limited to attorneys' fees, arising out of unauthorized reuse of ARC TEC or ARC TEC's consultants instruments of service.
Written dimensions on this drawing shall have precedence over any scaled dimension. DO NOT SCALE THIS DRAWING for accurate dimensions and notify ARC TEC of any discrepancies.

© Copyright ARC TEC, Inc. 2015

In Association with:

An Architectural and Site Approval Application for:

LOS ALTOS GOLF AND COUNTRY CLUB

1560 Country Club Drive
Los Altos, California

Los Altos Golf and Country Club

DATE	DESCRIPTION
11.20.2018	COUNTY ASA SUBMITTAL
01.07.2019	COUNTY ASA RESUBMITTAL
02.19.2019	COUNTY ASA RESUBMITTAL

DOOR AND WINDOW DETAILS

A4.02

PROJECT NO: 154085

PRELIMINARY SITE IMPROVEMENT PLANS

OF

LOS ALTOS GOLF & COUNTRY CLUB

1560 COUNTRY CLUB DRIVE
LOS ALTOS, CALIFORNIA

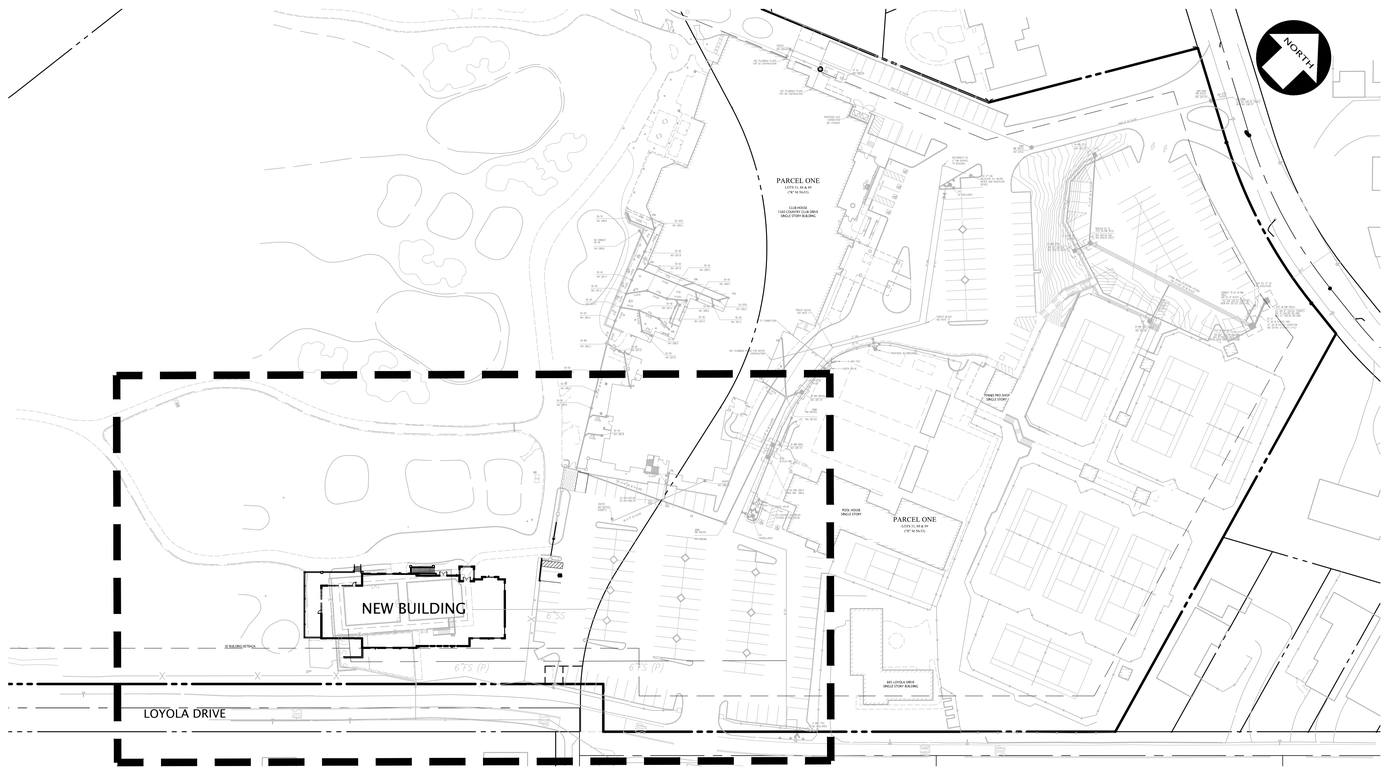

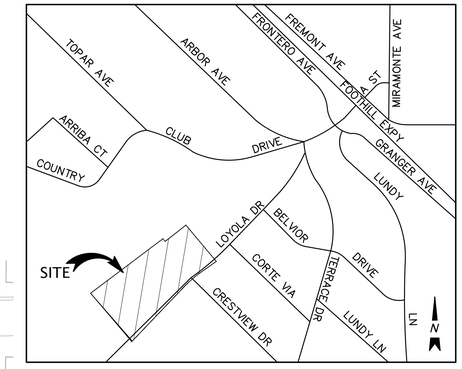

VICINITY MAP

NOT TO SCALE

SHEET INDEX

SHEET	DESCRIPTION
CIVIL	
CV	COVER SHEET
C1.0	TOPOGRAPHIC SURVEY
C1.1	TOPOGRAPHIC SURVEY
C2	TYPICAL SECTIONS
C3	PRELIMINARY GRADING & DRAINAGE PLAN
C4	PRELIMINARY UTILITY PLAN
C5	STORM WATER QUALITY CONTROL PLAN
C6	FIRE EXHIBIT

ARC TEC
ARCHITECTURAL TECHNOLOGIES
www.arctecinc.com
Arizona
2960 East Northern Avenue, Building C
Phoenix, AZ 85028 602.953.2355
California
1731 Technology Drive, Suite 750
San Jose, CA 95113 408.496.1121

The "user(s)" in possession of this documentation acknowledge(s) that the plans, specs, reports, CD's, computer files, computer models, electronic data and other documentation are instruments of service. ARC TEC and ARC TEC consultants shall be deemed the author and owner of such documentation. The "user(s)" in possession of this documentation shall not sue or authorize any other person to use ARC TEC's or ARC TEC consultants' instruments of service. Reuse without ARC TEC's written authorization will be at the user(s) sole risk and without liability to ARC TEC and ARC TEC's consultants. The user(s) agrees to defend, indemnify and hold harmless ARC TEC and ARC TEC's consultants and agents and employees from and against all claims, damages losses and expenses, including but not limited to attorneys' fees, arising out of unauthorized reuse of ARC TEC or ARC TEC's consultants instruments of service. Written dimensions on this drawing shall have precedence over any scaled dimension. DO NOT SCALE THIS DRAWING for accurate dimensions and notify ARC TEC if any discrepancies.

© Copyright ARC TEC, Inc. 2015

In Association with:

KIER & WRIGHT
CIVIL ENGINEERS & SURVEYORS, INC.
2850 Collier Canyon Road Phone (925) 245-8788
Livermore, California 94551 Fax (925) 245-8796
www.kierwright.com

AN ARCHITECTURAL AND SITE APPROVAL APPLICATION FOR:
LOS ALTOS GOLF & COUNTRY CLUB
1560 COUNTRY CLUB DRIVE
LOS ALTOS, CA

Los Altos Golf and Country Club

DATE	DESCRIPTION
11.20.2018	COUNTY ASA SUBMITTAL
1 01.07.2019	COUNTY ASA RESUBMITTAL
02.13.2019	PRICING PACKAGE SUBMITTAL
2 02.19.2019	COUNTY ASA RESUBMITTAL

CIVIL ENGINEER

KIER & WRIGHT CIVIL ENGINEERS & SURVEYORS, INC.
ATTN: EMAD SARIEDDINE, P.E.
2850 COLLIER CANYON ROAD
LIVERMORE, CA 94551
925-245-8788

LANDSCAPE ARCHITECT

KLA, INC.
ATTN: MATT HAWKS
151 N. NORLIN STREET
SONORA, CA, 95370
209-532-2856

ARCHITECT

ARC TEC
ATTN: ANNA PURVIS
1731 TECHNOLOGY DRIVE, SUITE 750
SAN JOSE, CA, 95110
408-496-0676

REGISTERED PROFESSIONAL ENGINEER
EMAD K. SARIEDDINE
No. C 65112
EXP. 6/30/19
STATE OF CALIFORNIA

811 Know what's below. Call before you dig.

COVER SHEET

CV

PROJECT NO:

C:\Users\ocarvalho\appdata\local\temp\AcPublish_20352\FIRE PLANNING RESUBMITTAL A10145-8-PG.dwg 2-15-19 03:25:05 PM ocarvalho

NOTES

1. THIS SURVEY WAS PREPARED FROM INFORMATION FURNISHED IN A PRELIMINARY TITLE REPORT, PREPARED BY FIRST AMERICAN TITLE INSURANCE COMPANY DATED AS OF NOVEMBER 9, 2010, ORDER NUMBER NCS-465277-SC. NO LIABILITY IS ASSUMED FOR MATTERS OF RECORD NOT STATED IN SAID PRELIMINARY TITLE REPORT THAT MAY AFFECT THE TITLE LINES, OR EXCEPTIONS, OR EASEMENTS OF THE PROPERTY.
2. ALL DISTANCES AND ELEVATIONS SHOWN HEREON ARE IN FEET AND DECIMALS THEREOF.
3. PHYSICAL ITEMS SHOWN ON THIS SURVEY ARE LIMITED TO THOSE ITEMS VISIBLE AS OF THE DATE OF THIS SURVEY. SUBSURFACE STRUCTURES, IF ANY, ARE NOT SHOWN. SAID SUBSURFACE OBJECTS MAY INCLUDE, BUT ARE NOT LIMITED TO, CONCRETE FOOTINGS, SLABS, SHORING, STRUCTURAL PILES, UTILITY VAULTS, PIPING, UNDERGROUND TANKS, AND ANY OTHER SUBSURFACE STRUCTURES NOT REVEALED BY A SURFACE INSPECTION.
4. BENCHMARK:
   DI RIM AT WEST SIDE OF LOYOLA DRIVE AT INTERSECTION OF ESBERG ROAD.
   ELEV: 278.83 (DATUM IS ASSUMED)
5. APN: 331-08-005 AND 331-11-125
6. FLOOD ZONE NOTE:
   THE SUBJECT PROPERTY IS SHOWN ON THE FEDERAL EMERGENCY MANAGEMENT AGENCY (FEMA) FLOOD INSURANCE RATE MAP (FIRM) FOR SANTA CLARA COUNTY, CALIFORNIA, MAP NUMBER 06085C0202H FOR COMMUNITY NUMBER 060341 0202 H (CITY OF LOS ALTOS), WITH AN EFFECTIVE DATE OF MAY 18, 2009, AS BEING LOCATED IN FLOOD ZONE "D".

   FLOOD ZONE D: AREAS IN WHICH FLOOD HAZARDS ARE UNDETERMINED, BUT POSSIBLE.

   INFORMATION WAS OBTAINED FROM THE FEMA WEBSITE (WWW.FEMA.GOV) ON DECEMBER 06, 2017.
7. BASIS OF BEARINGS:
   THE BEARING OF SOUTH 43°46'26" WEST TAKEN ON THE CENTERLINE OF LOYOLA DRIVE AS SHOWN ON THAT CERTAIN RECORD OF SURVEY, FILED FOR RECORD ON AUGUST 5, 2003 IN BOOK 763 OF MAPS AT PAGES 1-6, OFFICIAL RECORDS OF SANTA CLARA COUNTY WAS TAKEN AS THE BASIS FOR ALL BEARINGS SHOWN HEREON.
8. CORNER RECORD NOTE:
   THE DEVELOPER AND/OR CONTRACTOR SHALL BE RESPONSIBLE FOR THE PREPARATION AND FILING OF PRE-CONSTRUCTION AND POST-CONSTRUCTION CORNER RECORDS FOR ANY MONUMENTS OR PROPERTY CORNERS SHOWN HEREON THAT MAY BE DESTROYED DURING IMPROVEMENTS TO THE SUBJECT PROPERTY AS DEFINED IN SECTION 8771(B) OF THE PROFESSIONAL LAND SURVEYORS ACT.

ABBREVIATIONS

AC	ASPHALTIC CONCRETE	IB	IRRIGATION BOX
AD	AREA DRAIN	IE	INVERT ELEVATION
BS	BOTTOM OF STEP	IRR	IRRIGATION
BR	BOTTOM OF RAMP	L/S	LANDSCAPE
BTM	BOTTOM	O.R.	OFFICIAL RECORDS
C	CONCRETE	P	PAVEMENT
CLF	CHAIN LINK FENCE	PED	PEDESTAL
CONC	CONCRETE	(PP)	PER PLAN
DI	DROP INLET	RE	RIM ELEVATION
EB	ELECTRIC BOX	SSMH	SANITARY SEWER MANHOLE
EP	EDGE OF PAVEMENT	TC	TOP OF CURB
EW	EDGE OF WALK	TCD	THRU CURB DRAIN
FC	FACE OF CURB	TS	TOP OF STEP
FF	FINISH FLOOR	TW	TOP OF WALL
FL	FLOW LINE	TYP	TYPICAL
FNC	FENCE	WI	WROUGHT IRON
GRN	GROUND	WM	WATER METER

12-07-2017
DATE

PREPARED BY OR UNDER THE SUPERVISION OF
RYAN M. AMAYA L.S. 8134

LICENSED LAND SURVEYOR RYAN M. AMAYA No. 8134 STATE OF CALIFORNIA

NORTH

0 10 20 40 60
Scale 1" = 20'

LEGEND

ASPHALT BERM
BUILDING LINE
BUILDING LINE UNDERGROUND
CENTERLINE
CONCRETE/BLOCK/RETAINING WALL
CONCRETE CURB
CONTOUR LINE
EASEMENT LINE
EDGE OF PAVEMENT
ELECTRIC LINE
FENCE LINE
FIRE SERVICE & VALVE
GAS LINE-VALVE & METER
GRADE BREAK
HANDRAIL
LOT LINE
MONUMENT/MONUMENT LINE
OVERHEAD POWER LINE
PROPERTY LINE
SANITARY SEWER-MANHOLE & CLEANOUT
SIDEWALK
SPOT ELEVATION
STORM DRAIN-MANHOLE & CATCH BASIN
WATER LINE & VALVE
BACKFLOW PREVENTION DEVICE
ELECTROLIER
GUY ANCHOR
GAS METER
HANDICAP SYMBOL
POST INDICATOR VALVE
POWER POLE/JOINT POLE
TRAFFIC SIGN
TREE
UTILITY BOX

ARC TEC
ARCHITECTURAL TECHNOLOGIES
www.arctecinc.com
Arizona
2960 East Northern Avenue, Building C
Phoenix, AZ 85028 602.953.2355
California
1731 Technology Drive, Suite 750
San Jose, CA 95113 408.496.1121

The "user(s)" in possession of this documentation acknowledge(s) that the plans, specs, reports, electronic files, computer software, and other electronic data and other documentation are instruments of service. ARC TEC and ARC TEC consultants shall be deemed the author and owner of such documentation. The "user(s)" in possession of this documentation shall not sue or authorize any other person to use ARC TEC's or ARC TEC consultants' instruments of service. Reuse without ARC TEC's written authorization will be at the user(s) sole risk and without liability to ARC TEC and ARC TEC's consultants. The user(s) agree(s) to defend, indemnify and hold harmless ARC TEC and ARC TEC's consultants and agents and employees from and against all claims, damages losses and expenses, including but not limited to attorneys' fees, arising out of unauthorized reuse of ARC TEC or ARC TEC's consultants instruments of service. Written dimensions on this drawing shall have precedence over any scaled dimension. DO NOT SCALE THIS DRAWING for accurate dimensions and notify ARC TEC if any discrepancies.

© Copyright ARC TEC, Inc. 2015

In Association with:

KIER & WRIGHT
CIVIL ENGINEERS & SURVEYORS, INC.
2850 Collier Canyon Road Phone (925) 245-8788
Livermore, California 94551 Fax (925) 245-8796
www.kierwright.com

AN ARCHITECTURAL AND SITE APPROVAL APPLICATION FOR:
LOS ALTOS GOLF & COUNTRY CLUB
1560 COUNTRY CLUB DRIVE
LOS ALTOS, CA

Los Altos GOLF AND COUNTRY CLUB

DATE	DESCRIPTION
11.20.2018	COUNTY ASA SUBMITTAL
1 01.07.2019	COUNTY ASA RESUBMITTAL
02.13.2019	PRICING PACKAGE SUBMITTAL
2 02.19.2019	COUNTY ASA RESUBMITTAL

TOPOGRAPHIC SURVEY
C1.0

PROJECT NO:

C:\Users\ocarvotho\appdata\local\temp\AcPublish_20352\FIRE PLANNING RESUBMITTAL A10145-8-PG.dwg 2-15-19 03:25:08 PM ocarvotho

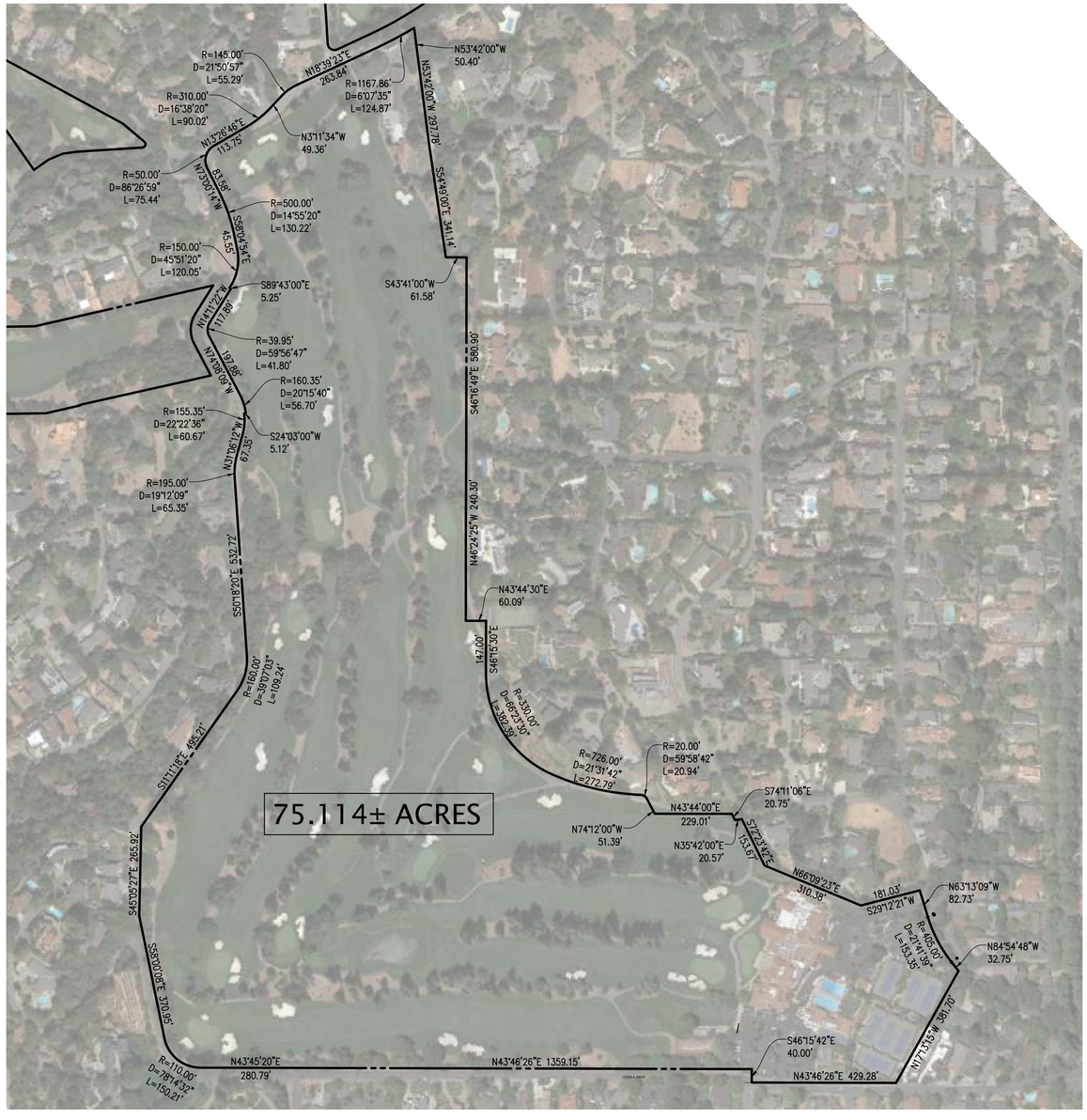

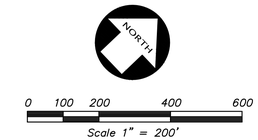

ARC TEC
ARCHITECTURAL TECHNOLOGIES
www.arctecinc.com
Arizona
2960 East Northern Avenue, Building C
Phoenix, AZ 85028 602.953.2355
California
1731 Technology Drive, Suite 750
San Jose, CA 95113 408.496.1121

The "user(s)" in possession of this documentation acknowledge(s) that the drawings, specs, reports, computer software programs and models, electronic data and other documentation are instruments of service. ARC TEC and ARC TEC consultants shall be deemed the author and owner of such documentation. The "user(s)" in possession of this documentation shall not sue or authorize any other person to use ARC TEC's or ARC TEC consultants' instruments of service. Reuse without ARC TEC's written authorization will be at the user(s) sole risk and without liability to ARC TEC and ARC TEC's consultants. The user(s) agree(s) to indemnify and defend and hold harmless ARC TEC and ARC TEC's consultants and agents and employees from and against all claims, damages losses and expenses, including but not limited to attorneys' fees, arising out of unauthorized reuse of ARC TEC or ARC TEC's consultants instruments of service.
Written dimensions on this drawing shall have precedence over any scaled dimension. DO NOT SCALE THIS DRAWING for accurate dimensions and notify ARC TEC if any discrepancies.

© Copyright ARC TEC, Inc. 2015

In Association with:

KIER & WRIGHT
CIVIL ENGINEERS & SURVEYORS, INC.
2850 Collier Canyon Road Phone (925) 245-8788
Livermore, California 94551 Fax (925) 245-8796
www.kierwright.com

AN ARCHITECTURAL AND SITE APPROVAL APPLICATION FOR:
LOS ALTOS GOLF & COUNTRY CLUB
1560 COUNTRY CLUB DRIVE
LOS ALTOS, CA

Los Altos GOLF AND COUNTRY CLUB

DATE	DESCRIPTION
11.20.2018	COUNTY ASA SUBMITTAL
△1 01.07.2019	COUNTY ASA RESUBMITTAL
02.13.2019	PRICING PACKAGE SUBMITTAL
△2 02.19.2019	COUNTY ASA RESUBMITTAL

TOPOGRAPHIC SURVEY

C1.1

PROJECT NO:

C:\Users\ocarvotho\appdata\local\temp\AcPublish_20352\FIRE PLANNING RESUBMITTAL A10145-B-PG.dwg 2-15-19 03:25:11 PM ocarvotho

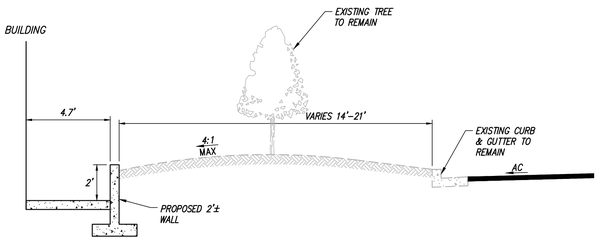

SECTION A

NOT TO SCALE

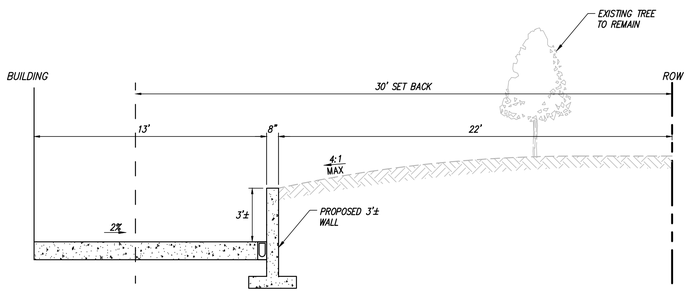

SECTION B

NOT TO SCALE

ARC TEC
ARCHITECTURAL TECHNOLOGIES
www.arctecinc.com
Arizona
2960 East Northern Avenue, Building C
Phoenix, AZ 85028 602.953.2355
California
1731 Technology Drive, Suite 750
San Jose, CA 95113 408.496.1121

The "user(s)" in possession of this documentation acknowledge(s) that the drawings, specs, CAD files, reports, calculations, computer files, and electronic data and other documentation are instruments of service. ARC TEC and ARC TEC consultants shall be deemed the author and owner of such documentation. The "user(s)" in possession of this documentation shall not sue or authorize any other person to use ARC TEC's or ARC TEC consultants' instruments of service. Reuse without ARC TEC's written authorization will be at the user(s) sole risk and without liability to ARC TEC and ARC TEC's consultants. The user(s) shall indemnify, defend and hold harmless ARC TEC and ARC TEC's consultants and agents and employees from and against all claims, damages losses and expenses, including but not limited to attorneys' fees, arising out of unauthorized reuse of ARC TEC or ARC TEC's consultants instruments of service. Written dimensions on this drawing shall have precedence over any scaled dimension. DO NOT SCALE THIS DRAWING for accurate dimensions and notify ARC TEC of any discrepancies.

© Copyright ARC TEC, Inc. 2015

In Association with:

KIER & WRIGHT
CIVIL ENGINEERS & SURVEYORS, INC.
2850 Collier Canyon Road Phone (925) 245-8788
Livermore, California 94551 Fax (925) 245-8796
www.kierwright.com

AN ARCHITECTURAL AND SITE APPROVAL APPLICATION FOR:

LOS ALTOS GOLF & COUNTRY CLUB

1560 COUNTRY CLUB DRIVE
LOS ALTOS, CA

Los Altos GOLF AND COUNTRY CLUB

DATE	DESCRIPTION
11.20.2018	COUNTY ASA SUBMITTAL
1 01.07.2019	COUNTY ASA RESUBMITTAL
02.13.2019	PRICING PACKAGE SUBMITTAL
2 02.19.2019	COUNTY ASA RESUBMITTAL

REGISTERED PROFESSIONAL ENGINEER
JOHN Y. SARTEDJONE
No. C55112
EXP. 12/31/19
STATE OF CALIFORNIA

TYPICAL SECTIONS

C2

PROJECT NO:

C:\Users\ocarvalho\appdata\local\temp\AcPublish_20352\FIRE PLANNING RESUBMITTAL A10145-8-PG.dwg 2-15-19 03:25:11 PM ocarvalho

SITE EARTHWORK SUMMARY

CUT: 400± CY

FILL: 100± CY

NOTE:

THE EARTHWORK QUANTITIES LISTED ON THESE PLANS ARE STATED ONLY FOR CALCULATION OF GRADING AND BUILDING PERMIT FEES. THESE QUANTITIES DO NOT INCLUDE TRENCH OR FOOTING SPOILS, SHRINK OR SWELL FROM COMPACTING EFFORTS OR OTHER VARIABLES. THE ENGINEER MAKES NO REPRESENTATION THIS SITE WILL BALANCE. THE CONTRACTOR SHALL DETERMINE HIS OWN EARTHWORK QUANTITIES AND BASE HIS BID ACCORDINGLY.

BUILDING EARTHWORK SUMMARY

CUT: 2,000± CY

FILL: 0 CY

NOTE:

THE EARTHWORK QUANTITIES LISTED ON THESE PLANS ARE STATED ONLY FOR CALCULATION OF GRADING AND BUILDING PERMIT FEES. THESE QUANTITIES DO NOT INCLUDE TRENCH OR FOOTING SPOILS, SHRINK OR SWELL FROM COMPACTING EFFORTS OR OTHER VARIABLES. THE ENGINEER MAKES NO REPRESENTATION THIS SITE WILL BALANCE. THE CONTRACTOR SHALL DETERMINE HIS OWN EARTHWORK QUANTITIES AND BASE HIS BID ACCORDINGLY.

KEYNOTES

1. EXISTING TREES TO REMAIN
2. EXISTING TREES TO BE REMOVED
3. ±3' HIGH WALL
4. 2' HIGH WALL
5. REMOVE EXISTING STRIPING AND REPLACE WITH NEW
6. NEW 6" CURB
7. SD PUMP OUTFALL
8. INSTALL NEW MAIN GATE WITH KNOX BOX SEE ARCHITECTURE PLANS
9. REMOVE EXISTING CURB AND LANDSCAPE
10. INSTALL NEW 26' GATE WITH KNOX BOX
11. REMOVE EXISTING WALL & FENCE

NOTE: GRADING DOES NOT IMPACT ADJACENT PARCELS

LEGEND

- AREA DRAIN
- STORM DRAIN CATCH BASIN
- STORM DRAIN JUNCTION BOX
- STORM DRAIN MANHOLE
- STORM DRAIN PUMP
- FL — FLOW LINE
- FF — FINISH FLOOR
- PV — PAVEMENT
- RE — RIM ELEVATION
- 23.8 — SPOT ELEVATION
- X"SD — STORM DRAIN LINE
- TC — TOP OF CURB
- CONCRETE
- BIO RETENTION
- GRIND AND OVERLAY
- INTERIOR FIRE ACCESS ROAD PER SCCFD STANDARDS

NORTH

0 10 20 40 60

Scale 1" = 20'

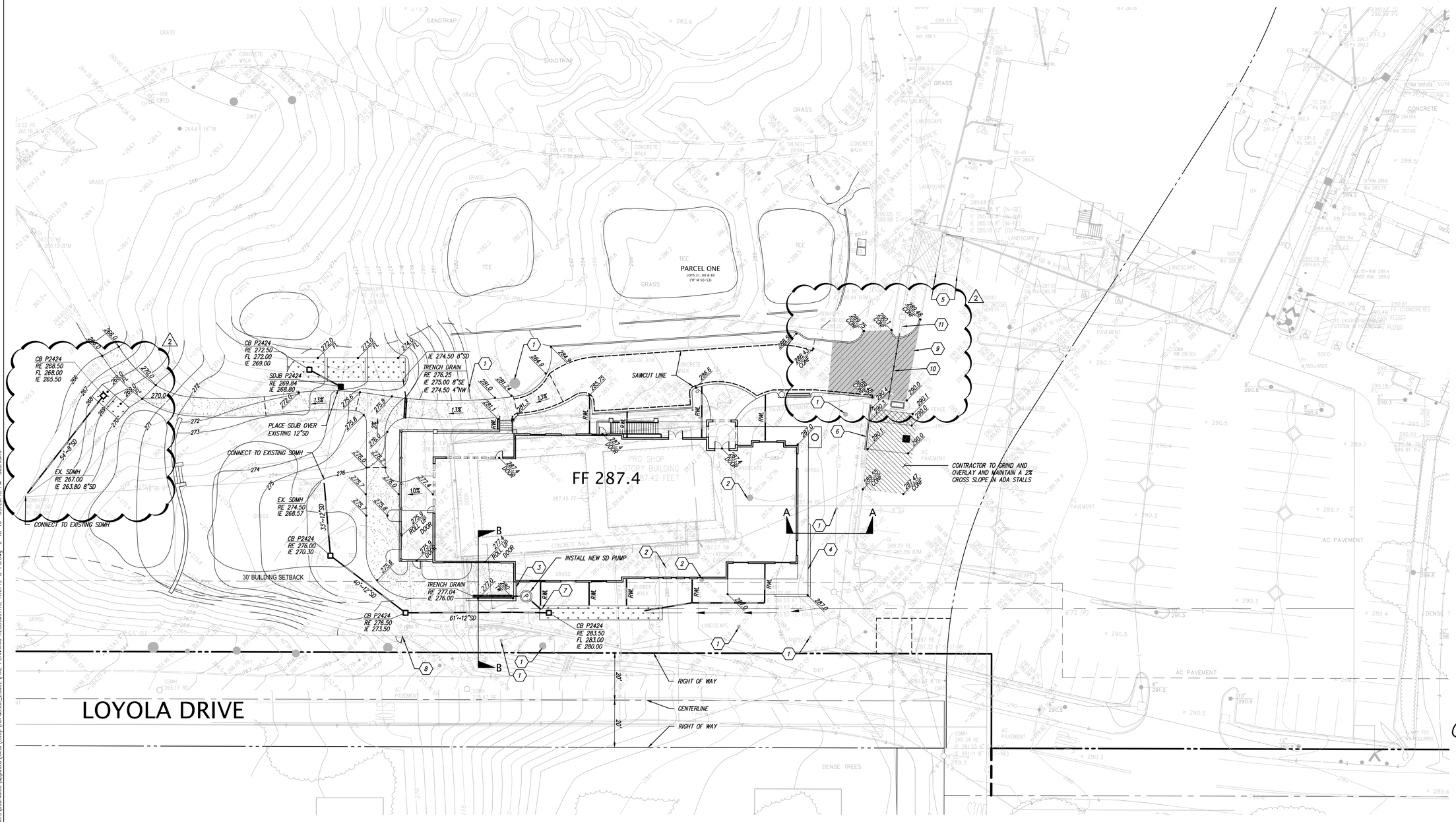

ARC TEC
ARCHITECTURAL TECHNOLOGIES
www.arctecinc.com

Arizona
2960 East Northern Avenue, Building C
Phoenix, AZ 85028 602.953.2355

California
1731 Technology Drive, Suite 750
San Jose, CA 95113 408.496.1121

The "user(s)" in possession of this documentation acknowledge(s) that ARC TEC's and ARC TEC consultants' drawings, specifications, reports, electronic data and other documentation are instruments of service. ARC TEC and ARC TEC consultants shall be deemed the author and owner of such documentation. The "user(s)" in possession of this documentation shall not sue or authorize any other person to sue ARC TEC's or ARC TEC consultants' instruments of service. Reuse without ARC TEC's written authorization will be at the user(s) sole risk and without liability to ARC TEC and ARC TEC's consultants. The user(s) possessing this documentation shall indemnify and hold ARC TEC and ARC TEC's consultants harmless and defend their employees from and against all claims, damages losses and expenses, including but not limited to attorneys' fees, arising out of unauthorized reuse of ARC TEC's or ARC TEC's consultants instruments of service.
Written dimensions on this drawing shall have precedence over any scaled dimension. DO NOT SCALE THIS DRAWING for accurate dimensions and notify ARC TEC of any discrepancies.

© Copyright ARC TEC, Inc. 2015

In Association with:

KIER & WRIGHT
CIVIL ENGINEERS & SURVEYORS, INC.
2850 Collier Canyon Road Phone (925) 245-8788
Livermore, California 94551 Fax (925) 245-8796
www.kierwright.com

AN ARCHITECTURAL AND SITE APPROVAL APPLICATION FOR:
LOS ALTOS GOLF & COUNTRY CLUB
1560 COUNTRY CLUB DRIVE
LOS ALTOS, CA

Los Altos Golf and Country Club

DATE	DESCRIPTION
11.20.2018	COUNTY ASA SUBMITTAL
1 01.07.2019	COUNTY ASA RESUBMITTAL
02.13.2019	PRICING PACKAGE SUBMITTAL
2 02.19.2019	COUNTY ASA RESUBMITTAL

REGISTERED PROFESSIONAL ENGINEER
DAVID P. SARTOZZIAN
No. C65112
Exp. 12/31
STATE OF CALIFORNIA

PRELIM
GRADING

C3

PROJECT NO:

C:\Users\pcarvalho\appdata\local\temp\AcPublish_20352\PRE PLANNING RESUBMITTAL A10145--8--PG.dwg 2-15-19 03:25:15 PM pcarvalho

KEYNOTES

1 DAYLIGHT RAINWATER LEADER TO BIO-SWALE

NORTH

0 10 20 40 60

Scale 1" = 20'

LEGEND

ASR	AUTOMATIC SPRINKLER RISER
RE	RIM ELEVATION
TC	TOP OF CURB
WS	WATER SERVICE
	EXISTING UTILITY TO BE ABANDONDED BY REMOVAL
FS	FIRE SERVICE
SS	SANITARY SEWER
COTG	CLEANOUT TO GRADE
	STORM DRAIN LINE
	AREA DRAIN
	STORM DRAIN CATCH BASIN
	STORM DRAIN JUNCTION BOX
	STORM DRAIN MANHOLE
	BACK FLOW PREVENTION DEVICE
	FIRE DEPARTMENT CONNECTION
	FIRE HYDRANT & VALVE
	POST INDICATOR VALVE
SSMH	SANITARY SEWER MANHOLE
	SINGLE CHECK VALVE
SDMH	STORM DRAIN MANHOLE
	WATER METER
	STORM DRAIN PUMP

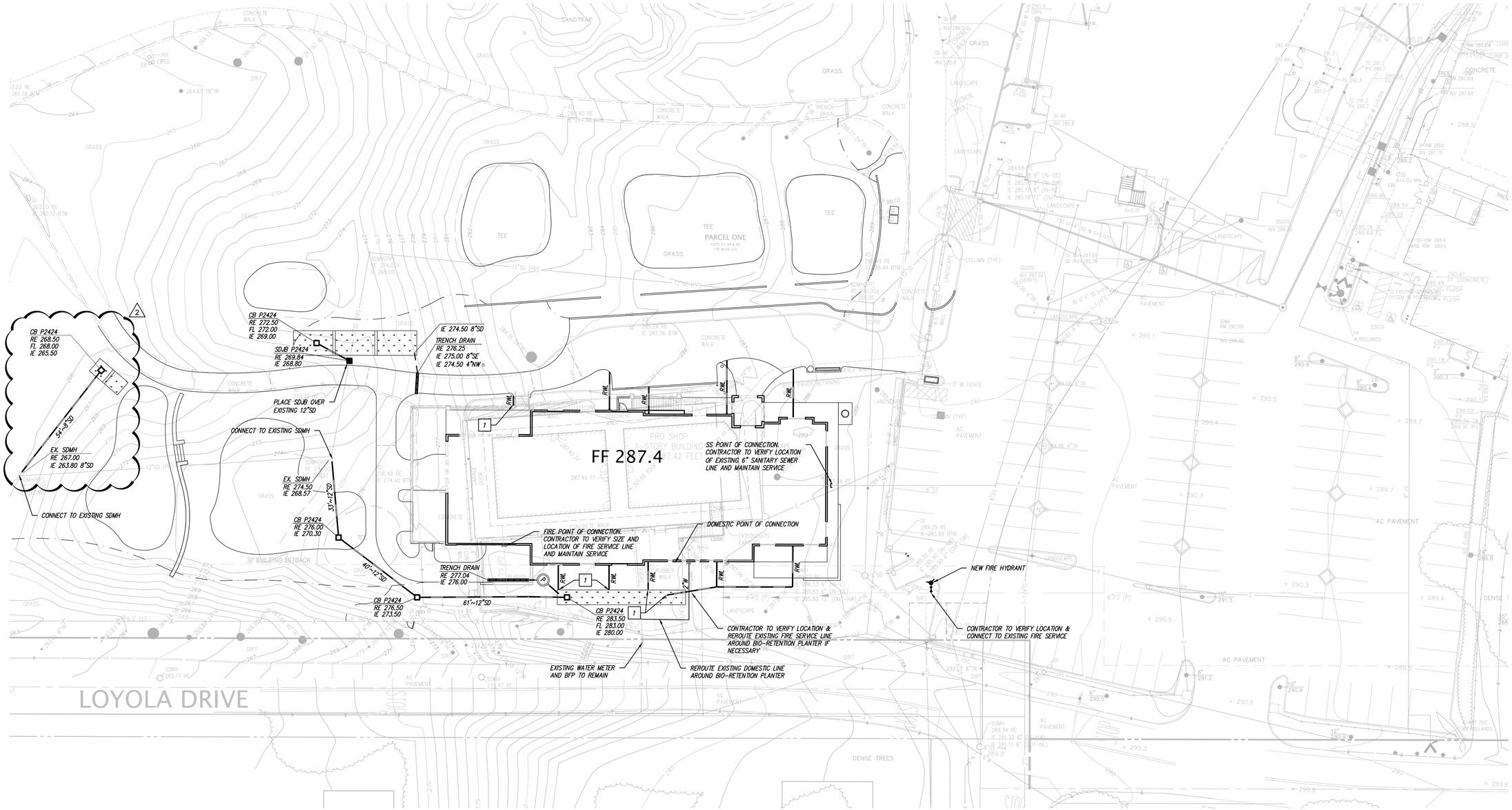

ARC TEC
ARCHITECTURAL TECHNOLOGIES
www.arctecinc.com
Arizona
2960 East Northern Avenue, Building C
Phoenix, AZ 85028 602.953.2355
California
1731 Technology Drive, Suite 750
San Jose, CA 95113 408.496.1121

The "user(s)" in possession of this documentation acknowledge(s) that the plans, specs, CAD files, reports, calculations, computer files, and electronic data and other documentation are instruments of service. ARC TEC and ARC TEC consultants shall be deemed the author and owner of such documentation. The "user(s)" in possession of this documentation shall not sue or authorize any other person to use ARC TEC's or ARC TEC consultants' instruments of service. Reuse without ARC TEC's written authorization will be at the user(s) sole risk and without liability to ARC TEC and ARC TEC's consultants. The user(s) agree(s) to indemnify and defend and hold harmless ARC TEC and ARC TEC's consultants and agents and employees from and against all claims, damages losses and expenses, including but not limited to attorneys' fees, arising out of unauthorized reuse of ARC TEC or ARC TEC's consultants instruments of service. Written dimensions on this drawing shall have precedence over any scaled dimension. DO NOT SCALE THIS DRAWING for accurate dimensions and notify ARC TEC of any discrepancies.

© Copyright ARC TEC, Inc. 2015

In Association with:

KIER & WRIGHT
CIVIL ENGINEERS & SURVEYORS, INC.
2850 Collier Canyon Road Phone (925) 245-8788
Livermore, California 94551 Fax (925) 245-8796
www.kierwright.com

AN ARCHITECTURAL AND SITE APPROVAL APPLICATION FOR: LOS ALTOS GOLF & COUNTRY CLUB

1560 COUNTRY CLUB DRIVE
LOS ALTOS, CA

Los Altos Golf and Country Club

DATE	DESCRIPTION
11.20.2018	COUNTY ASA SUBMITTAL
1 01.07.2019	COUNTY ASA RESUBMITTAL
02.13.2019	PRICING PACKAGE SUBMITTAL
2 02.19.2019	COUNTY ASA RESUBMITTAL

REGISTERED PROFESSIONAL ENGINEER
DAVID T. SARTEDDINE
No. C65112
CIVIL
STATE OF CALIFORNIA

PRELIM
UTILITY

C4

PROJECT NO:

C:\Users\pcarvalho\appdata\local\temp\AcPublish_20352\FIRE PLANNING RESUBMITTAL A10145-8-PIC.dwg 2-15-19 03:25:19 PM pcarvalho

BIO-RETENTION SIZING CALCULATIONS

Area No.	Area (SF)	Area (AC)	Landscape (SF)	Landscape (AC)	Imperv. (SF)	Imperv. (AC)	Equivalent Imperv. Area (SF)	Treatment Area Required*	Treatment Area Provided (SF)	Sizing Ratio (%)	Ponding Depth (IN)	Type of Planter
DMA 1	17,299	0.40	5,510	0.13	11,289	0.26	11,890	476	**500**	4.2%	6	Bio-Retention Planter
DMA 2	10,440	0.24	3,748	0.09	6,380	0.15	6,786	271	**312**	4.6%	6	Bio-Retention Planter
DMA 3	12,796	0.29	11,880	0.27	916	0.02	2,114	85	**100**	4.8%	6	Bio-Retention Planter

*: Treatment Required is based on 4% of the effective impervious area

Totals **40,535** **0.9** **21,138** **0.49** **18,585** **0.43**

EXISTING PERVIOUS SURFACE = 24,713 SF
EXISTING IMPERVIOUS SURFACE = 15,423 SF

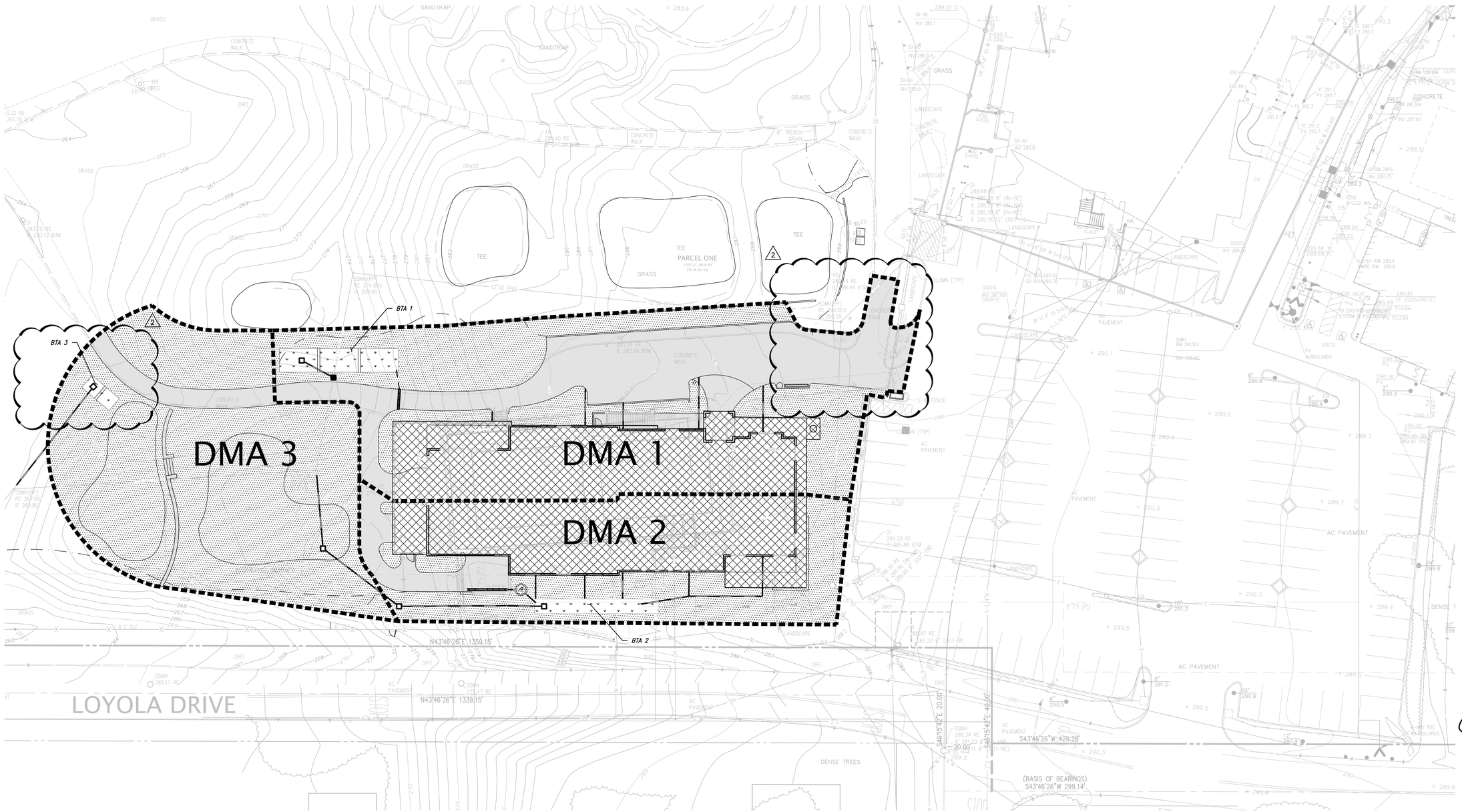

NORTH

0 10 20 40 60

Scale 1" = 20'

LEGEND

- TRIBUTARY AREA LIMITS
- LANDSCAPE AREA
- IMPERVIOUS ROOFTOP DRAINING TO BIO-SWALE
- IMPERVIOUS PAVEMENT DRAINING TO BIO-SWALE
- BIO-RETENTION TREATMENT AREA
- NEW IMPERVIOUS AREA NOT TREATED
- EXISTING IMPERVIOUS AREA DRAINING TO BIO-SWALE

ARC TEC
ARCHITECTURAL TECHNOLOGIES
www.arctecinc.com
Arizona
2960 East Northern Avenue, Building C
Phoenix, AZ 85028 602.953.2355
California
1731 Technology Drive, Suite 750
San Jose, CA 95113 408.496.1121

The "user(s)" in possession of this documentation acknowledge(s) that the plans, specs, CAD files, reports, calculations, computer files, and electronic data and other documentation are instruments of service. ARC TEC and ARC TEC consultants shall be deemed the author and owner of such documentation. The "user(s)" in possession of this documentation shall not sue or authorize any other person to use ARC TEC's or ARC TEC consultants' instruments of service. Reuse without ARC TEC's written authorization will be at the user(s) sole risk and without liability to ARC TEC and ARC TEC's consultants. The user(s) agree(s) to indemnify and hold harmless ARC TEC and hold harmless ARC TEC and ARC TEC's consultants and agents and employees from and against all claims, damages losses and expenses, including but not limited to attorneys' fees, arising out of unauthorized reuse of ARC TEC or ARC TEC's consultants instruments of service. Written dimensions on this drawing shall have precedence over any scaled dimension. DO NOT SCALE THIS DRAWING for accurate dimensions and notify ARC TEC of any discrepancies.

© Copyright ARC TEC, Inc. 2015

In Association with:

KIER & WRIGHT
CIVIL ENGINEERS & SURVEYORS, INC.
2850 Collier Canyon Road Phone (925) 245-8788
Livermore, California 94551 Fax (925) 245-8796
www.kierwright.com

AN ARCHITECTURAL AND SITE APPROVAL APPLICATION FOR:
LOS ALTOS GOLF & COUNTRY CLUB
1560 COUNTRY CLUB DRIVE
LOS ALTOS, CA

Los Altos Golf and Country Club

DATE	DESCRIPTION
11.20.2018	COUNTY ASA SUBMITTAL
1 01.07.2019	COUNTY ASA RESUBMITTAL
02.13.2019	PRICING PACKAGE SUBMITTAL
2 02.19.2019	COUNTY ASA RESUBMITTAL

REGISTERED PROFESSIONAL ENGINEER
DAVID T. SARTOORIVE
No. C55112
CIVIL
STATE OF CALIFORNIA

SWQCP

C5

PROJECT NO:

C:\Users\ocorvalho\appdata\local\temp\AcPublish_20352\FIRE PLANNING RESUBMITTAL A10145-8-PIC.dwg 2-15-19 03:25:22 PM ocorvalho

LEGEND

FIRE TRUCK TURNING RADIUS OF INSIDE AND OUTSIDE RADIUS ON 42' AND 52' RESPECTIVELY

BIO-RETENTION TREATMENT AREA

INTERIOR FIRE ACCESS ROAD PER SCCFD STANDARDS

NORTH

0 10 20 40 60

Scale 1" = 20'

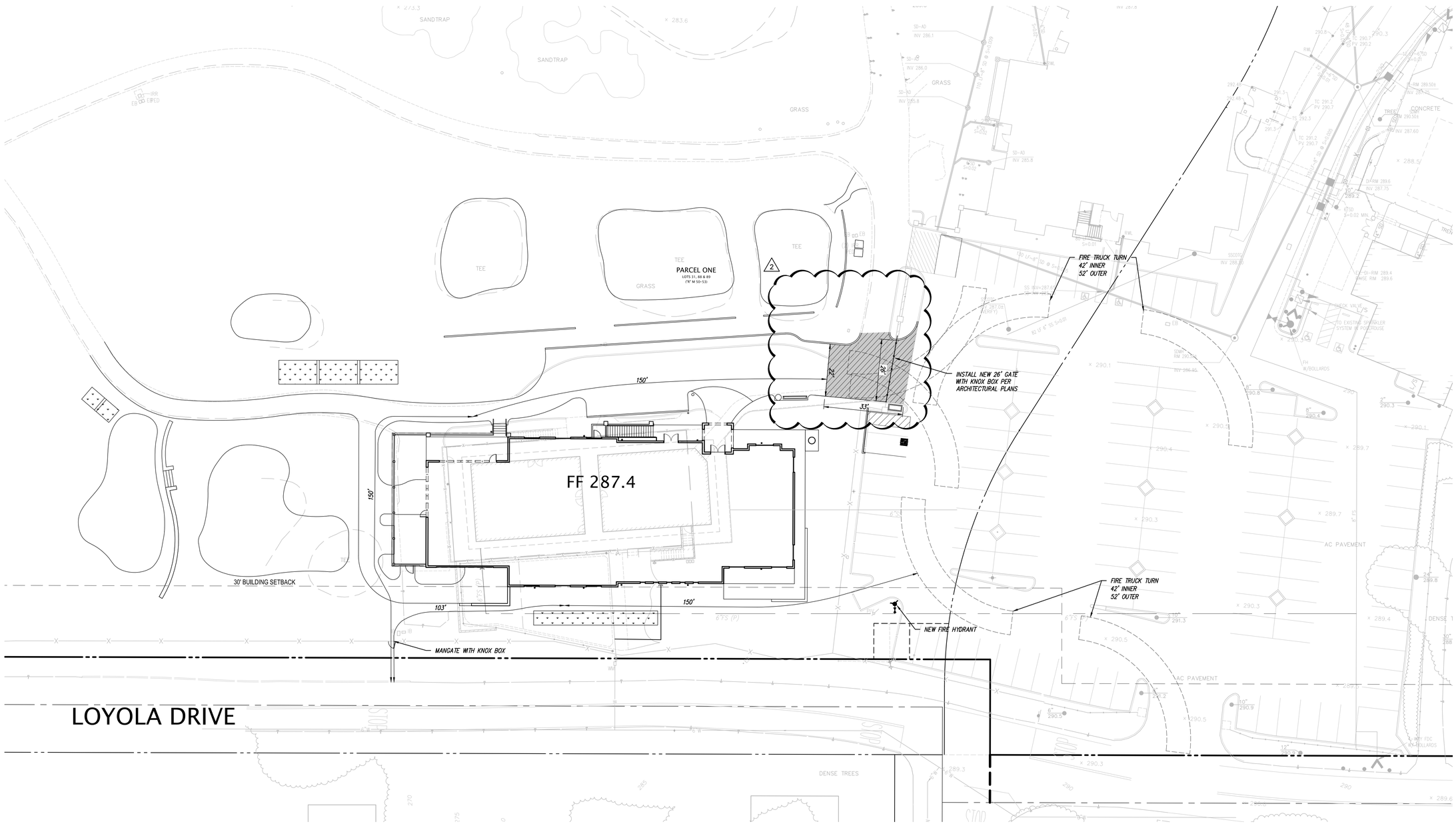

ARC TEC
ARCHITECTURAL TECHNOLOGIES
www.arctecinc.com

Arizona
2960 East Northern Avenue, Building C
Phoenix, AZ 85028 602.953.2355

California
1731 Technology Drive, Suite 750
San Jose, CA 95113 408.496.1121

The "user(s)" in possession of this documentation acknowledge(s) that ARC TEC's and ARC TEC consultants' drawings, specifications, reports, electronic data and other documentation are instruments of service. ARC TEC and ARC TEC consultants shall be deemed the author and owner of such documentation. The "user(s)" in possession of this documentation shall not sue or authorize any other person to sue ARC TEC's or ARC TEC consultants' instruments of service. Reuse without ARC TEC's written authorization will be at the user(s) sole risk and without liability to ARC TEC and ARC TEC's consultants. The user(s) possessing this documentation shall indemnify and hold harmless ARC TEC and ARC TEC consultants and their officers and employees from and against all claims, damages losses and expenses, including but not limited to attorneys' fees, arising out of unauthorized reuse of ARC TEC's or ARC TEC's consultants instruments of service.

Written dimensions on this drawing shall have precedence over any scaled dimension. DO NOT SCALE THIS DRAWING for accurate dimensions and notify ARC TEC of any discrepancies.

© Copyright ARC TEC, Inc. 2015

In Association with:

KIER & WRIGHT
CIVIL ENGINEERS & SURVEYORS, INC.
2850 Collier Canyon Road Phone (925) 245-8788
Livermore, California 94551 Fax (925) 245-8796
www.kierwright.com

AN ARCHITECTURAL AND SITE APPROVAL APPLICATION FOR:

LOS ALTOS GOLF & COUNTRY CLUB

1560 COUNTRY CLUB DRIVE
LOS ALTOS, CA

Los Altos Golf and Country Club

DATE	DESCRIPTION
11.20.2018	COUNTY ASA SUBMITTAL
1 01.07.2019	COUNTY ASA RESUBMITTAL
02.13.2019	PRICING PACKAGE SUBMITTAL
2 02.19.2019	COUNTY ASA RESUBMITTAL

REGISTERED PROFESSIONAL ENGINEER
JAD T. SARTEDDINE
No. C65112
CIVIL
STATE OF CALIFORNIA

FIRE EXHIBIT

C6

PROJECT NO:

C:\Users\ocarvalho\appdata\local\temp\AcPublish_20352\FIRE PLANNING RESUBMITTAL A10145-8-PG.dwg 2-15-19 03:25:26 PM ocarvalho

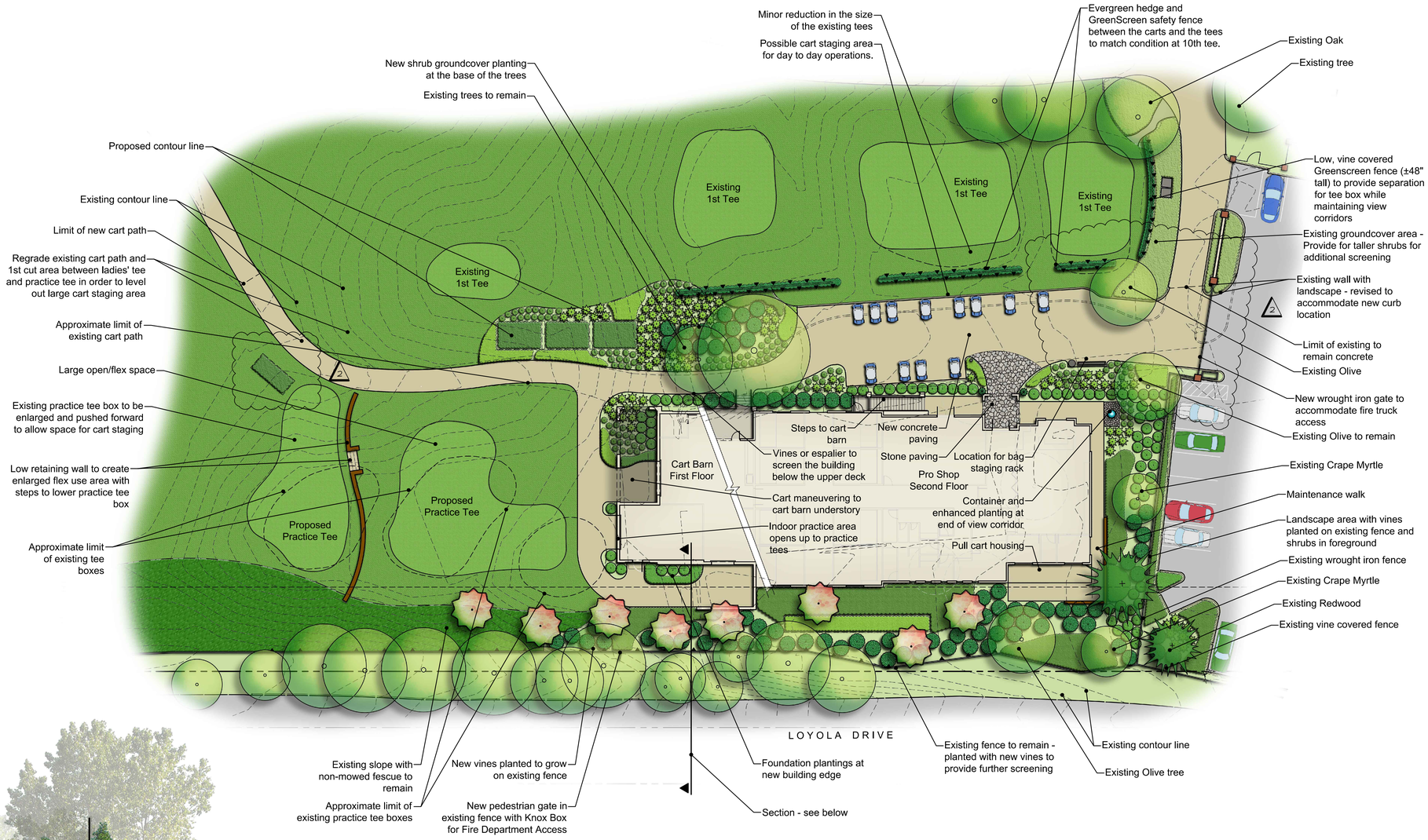

Illustrative Landscape Plan

Scale: 1" = 20'-0"

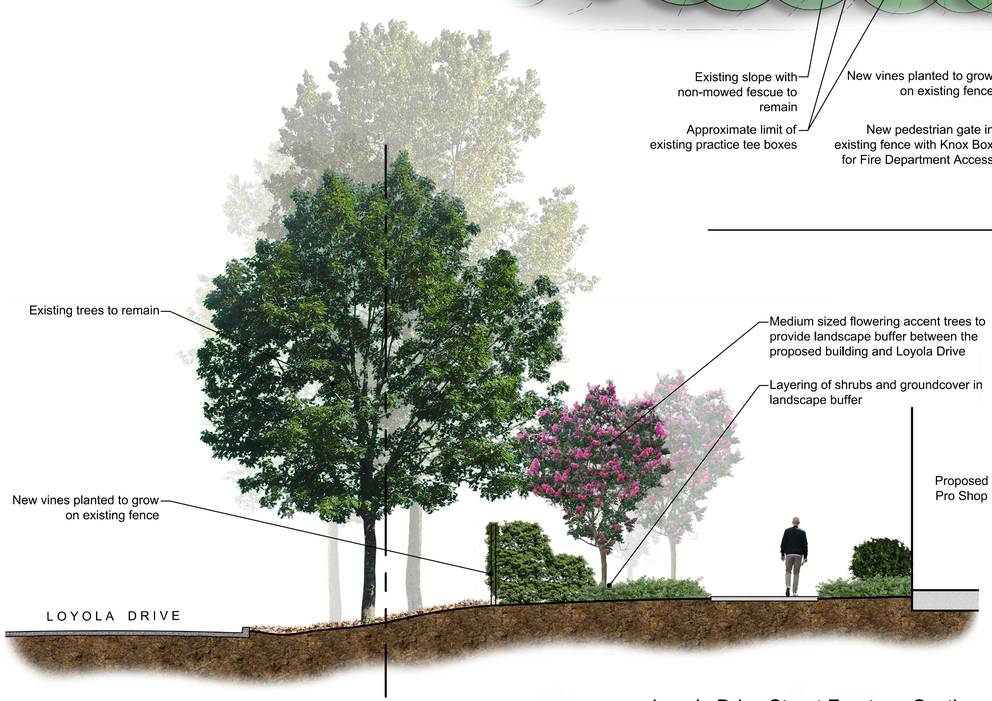

Loyola Drive Street Frontage Section

Scale: 3/16" = 1'-0"

Landscape Concept

The landscape design concept for the Los Altos Golf and Country Club Pro Shop is to provide an enjoyable and aesthetic space for Members and Visitors that fits within the landscape framework of the existing neighborhood and the surrounding area, as well as the requirements of the City. Plant material has been selected that performs well in the special conditions of the Los Altos/Loyola area (Sunset Zone #15).

No new high water use turf areas have been added (turf area has only been reduced). Low and medium water use hardy trees, shrubs and groundcover are proposed for the landscape around the site. The landscape (and associated irrigation) has been designed to be compliant with the Model Water Efficient Landscape Ordinance (MWELO). See Sheets L0.2 and L0.3 for Planting and Irrigation design which demonstrates this requirement.

Special considerations have been provided in selection of plant material that respect the needs of the facility as well as the users. Clear and secure view corridors have been provided to ensure safety of those entering and moving around the site.

NORTH

Scale: 1" = 20'-0"

0' 10' 20' 40'

Vicinity Map

Not to scale

ARC TEC
ARCHITECTURAL TECHNOLOGIES
www.arctecinc.com
Arizona
2960 East Northern Avenue, Building C
Phoenix, AZ 85028 602.953.2355
California
1731 Technology Drive, Suite 750
San Jose, CA 95113 408.496.1121

The "user(s)" in possession of this documentation acknowledge(s) that ARC TEC's and ARC TEC consultants' drawings, specifications, reports, electronic data and other documentation are instruments of service. ARC TEC and ARC TEC consultants shall be deemed the author and owner of such documentation. The "user(s)" in possession of this documentation shall not sue or authorize any other person to use ARC TEC's or ARC TEC consultants' instruments of service. Reuse without ARC TEC's written authorization will be at the user(s) sole risk and without liability to ARC TEC and ARC TEC's consultants. The user(s) possessing this documentation shall indemnify and hold harmless ARC TEC and ARC TEC consultants and their officers and employees from and against all claims, damages losses and expenses, including but not limited to attorneys' fees, arising out of unauthorized reuse of ARC TEC or ARC TEC's consultants instruments of service.
Written dimensions on this drawing shall have precedence over any scaled dimension. DO NOT SCALE THIS DRAWING for accurate dimensions and notify ARC TEC of any discrepancies.

© Copyright ARC TEC, Inc. 2015

In Association with:

KLA
LANDSCAPE ARCHITECTURE PLANNING
151 N. Nardo St.
Sonora, CA 95370
(209)532-2966

An Architectural and Site Approval Application for:

LOS ALTOS GOLF AND COUNTRY CLUB

1560 Country Club Drive
Los Altos, California

Los Altos Golf and Country Club

DATE	DESCRIPTION
11.20.2018	COUNTY ASA SUBMITTAL
1 01.07.2019	COUNTY ASA RESUBMITTAL
2 02.19.2019	COUNTY ASA RESUBMITTAL

Illustrative Landscape Plan

L0.1

PROJECT NO: 154085/KLA 16-1870

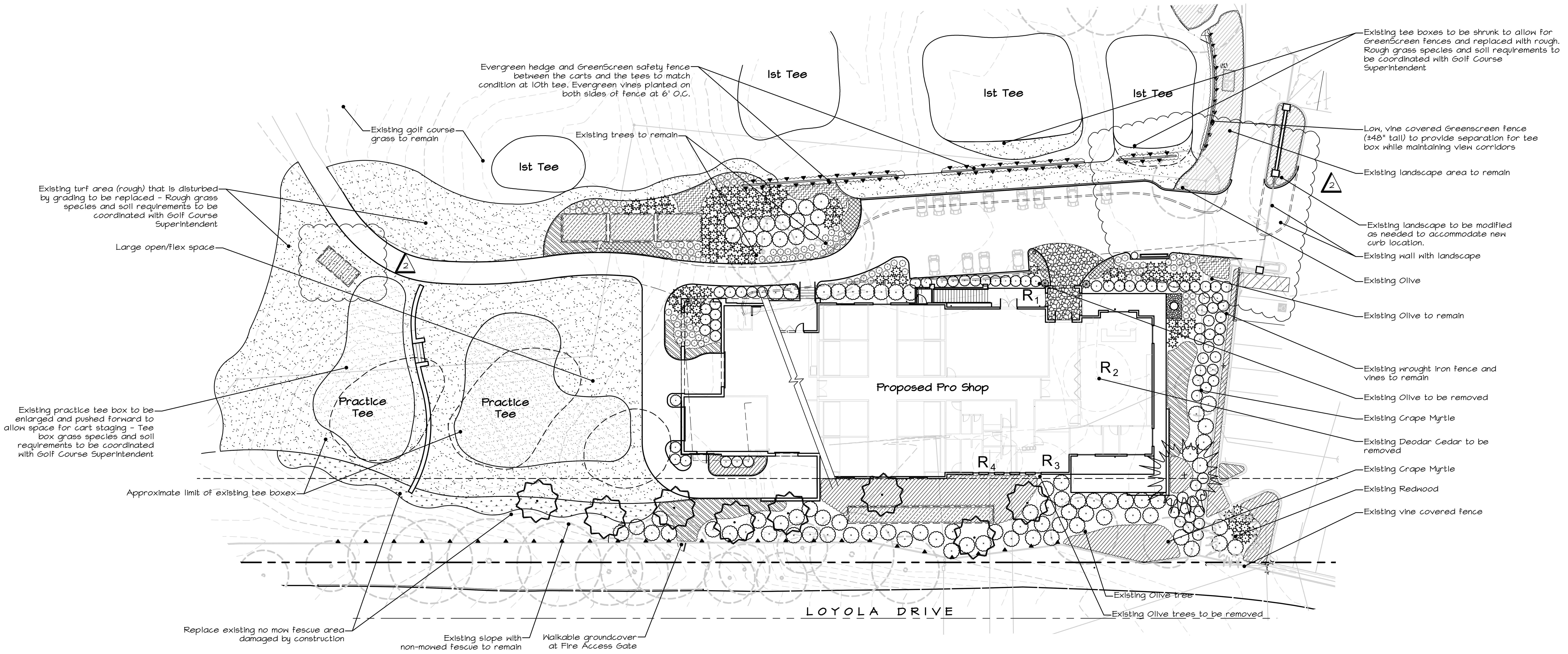

Existing Tree Inventory - Removal

Key	Description	Condition	Disposition
R1	See Arborist's Report	Good	To be Removed
R2	See Arborist's Report	Good	To be Removed
R3	See Arborist's Report	Good	To be Removed
R4	See Arborist's Report	Good	To be Removed

All other surveyed and inventoried trees are to remain and be protected in place. See Arborist's report for full Tree Inventory, Recommendations, and Tree Removal/Protection Practices.

Site Trees

Existing On-Site Tree to remain, listed in tree inventory per accompanying Arborist's Report

R 1 — Existing On-Site Tree to be removed, listed in inventory - See Arborist's Report

GENERAL PLANTING NOTES

1. The contractor shall examine the conditions of the site prior to commencement of work. Any conditions that differ from what is shown on the plans that will affect the installation process shall be brought to the attention of the Owner or Land. Arch. prior to work. Commencement of work implies acceptance of the conditions of the site.
2. The contractor shall verify all plant quantities prior to installation. Plant quantities are listed for the convenience of the contractor, number of symbols and groundcover spacing shall have priority over quantity given.
3. The contractor shall be responsible for the purchasing of all material to meet the specifications of the plans including plants, soil, fertilizer, stakes, and sod. The contractor shall also be responsible for the protection of these materials until the project has been completely turned over to the owner.
4. All plant material shall be subject to approval or rejection by the Landscape Architect or Owner's Representative prior to installation. Installed and then rejected material shall be replaced by the contractor at his/her expense.
5. The contractor shall include in the bid for a continued maintenance period of sixty (60) days after completion and acceptance of the project by the Owner or Owner's Rep.
6. Trees to be planted a min. of 3'-0" from edge of paving or walls (unless otherwise stated on plan). All trees in a formal group or in a row shall be matching in size and shape.
7. All vines shall be installed with the nursery stakes removed and runners espaliered to the adjacent wall.
8. The following soil amendments specified are for bidding purposes only. The Landscape Contractor shall provide for a Soil Agronomy Report from an approved soils laboratory and/or any additional specifications provided by the Land. Arch. prior to installation of the plant material. The following amendments shall be incorporated into all planting pits and broadcast into soil to depth of 12" by means of a rototiller or equal per 1000 square feet.
   - 4 cyds nitrogen stabilized organic amendment derived from redwood sawdust, fir sawdust or cedar sawdust.
   - 15 lbs. soil sulfur
   - 15 lbs. 15-15-15 fertilizer
9. All soil preparation shall be installed per the soil agronomy report to be provided and paid for by the Landscape Contractor. The report is to be immediately forwarded to the Land. Arch. upon completion.
10. A nitrogen stabilized commercial-grade mulch with maximum 3/4" dia. chip size shall be uniformly broadcast over all shrub areas (not turf) to a depth as specified on the Planting Legend.
11. The planting pits for trees shall be excavated per the detail on the Landscape Details sheet. The backfill mix for use in all tree and shrub pits shall consist of the following:
   - 6 parts 'on-site' soil
   - 4 parts organic amendment (above)
   - 1 lb./yd. of mix 12-12-12 commercial fertilizer
   - 2 lbs./cu. yd. of mix Iron Sulfate
   - 10 lbs./cu. yd. of mix Agricultural Gypsum
12. Fertilizer tablets shall be BEST, 21 gram fertilizer tablets (20-10-5) placed in all planting pits in quantities as follows:

1 gallon	1 tablet
5 gallon	3 tablets
15 gallon	9 tablets
24"-Box	9 tablets
36"-Box	15 tablets

13. Thirty (30) days after installation all landscape shall be fertilized with 16-6-8 Fertilizer applied at the rate of 6 lbs./1000 sf. Fertilizer application shall be continued thereafter at bi-monthly intervals.
14. For weed control prior to planting, the Landscape Contractor shall thoroughly irrigate the site to promote germination of weed seeds that may be in the soil. After germination has taken place spray the site with Round-Up (or equal) in the amount, and let sit for the time specified by the manufacturer. Reapply Round-Up if needed. After all green weeds have been eradicated, apply Ronstar-G (or equal) Pre-Emergent weed control in the amounts specified by the manufacturer.
15. All plant material to be nursery grown in similar climate. All plant material shall be vigorous and of normal habit of growth and shall be free of girdling roots, sun scald, abrasions, disease, insects, insect eggs and larvae. Plants shall equal or exceed the standards as outlined by the American Standards for Nursery Stock and to applicable California Agriculture Code.

TREE PROTECTION DURING CONSTRUCTION

1. All trees that are shown on the planting plan denoted with an 'E' or specifically shown not to be removed are to remain on site and to be cared for throughout the construction process in accordance with the following notes. If there is a question as to whether a tree is to remain or be removed, ask the landscape architect or owner prior to removal. The contractor will be required to replace any trees that are removed or die due to negligence or not specifically following these notes.
2. A construction fence such as orange netting is to be erected completely around the dripline of all trees to be saved. This fence is to remain standing throughout the construction process. No items are allowed to be stored within the fenced-off area. (Construction equipment and storage causes soil compaction which can kill the trees).
3. Utility lines and all associated trenching are to be laid-out to avoid conflict and cutting of the existing tree roots.
4. Any damage inadvertently caused to the trees such as broken branches, etc. is to be reviewed immediately by a certified arborist. The recommendations made by the arborist are to be carried out immediately to the satisfaction of the owner.
5. When landscape operations begin, grading within the dripline of the tree is to be kept to a minimum. Any roots damaged by irrigation trenching or planting pit excavation are to be repaired per the recommendations of a certified arborist. No mainline is to be located within the tree dripline and lateral lines are to be laid-out with minimal impact on the tree's root structure.
6. It is the responsibility of the General Contractor to ensure the health of all existing trees. Trees damaged or killed during construction are to be replaced at a size large enough to the satisfaction of the owner.

Preliminary Plant Palette

Trees

Evergreen Conifer Trees - 36" Box - Qty. 1
- Cedrus deodara — Deodar Cedar
- Sequoia sempervirens — Coast Redwood

Flowering Accent Trees - 24" Box - Qty. 5
- Lagerstroemia indica — Crape Myrtle
- Cercis occidentalis — Western Redbud

Groundcovers

Grasses - Golf course grasses for each specific use (i.e. rough, first cut, teebox, etc.) are to match existing varieties used by the course. Subgrade, soil amendments, and other specifications related to installation of each specific use shall be coordinated and installed to the Golf Course Superintendent's satisfaction.
- Sodded or Seed — Lawn

No Mow Fescue - Existing slope is planted with No Mow Fescue. Plan shows approximate limits expected to need replacement due to damage from construction and/or grading. Actual limits may vary. No Mow Fescue to match exiting.
- Sodded or Seed — No Mow Fescue

Low Flowering Accent Shrubs - 1 gal. @ 24" O.C.
- Hemerocallis hybridus — Day Lily
- Lantana species — Lantana
- Rosa 'Red Flower Carpet' — Groundcover Rose
- Salvia species — Sage
- Teucrium chamaedrys — Germander

Low Parking Lot Plants - 1 gal. @ 42" O.C.
- Acacia redolens — Acacia
- Baccharis pilularis — Coyote Bush
- Dietes bicolor — Fortnight Lily
- Juniperus species — Juniper
- Teucrium chamaedrys — Germander

Grasses and grass-like plants - 1 and/or 5 gallon @ 36" O.C.
- Calamagrostis acutiflora 'Karl Foerster' — Feather Reed Grass
- Carex spp — Sedge
- Chondropetalum tectorum — Cape Rush
- Lomandra longifolia 'Breeze' — Breeze Mat-Rush
- Festuca mairei — Atlas Fescue
- Juncus patens — California Gray Rush

Low walkable groundcover - flatted or 1 gallon @ 16" O.C.
- Dymondia margaretae — Dymondia
- Carex 'Frosty Curls' — Frosty Curls Her Sedge
- Festuca rubrum — Red Fescue
- Lippia nodiflora 'Kurapia' — Kurapia
- Teucrium chamaedrys 'Prostratum' — Germander

Vines

Climbing Vines - 15 gal.
- Clematis armandii — Evergreen Clematis
- Macfadyena unguis-cati — Cat's Claw Vine
- Tecoma capensis — Cape Honeysuckle
- Trachelospermum jasminoides — Star Jasmine

Shrubs

Screen / Buffer Shrubs - 5 gal.
- Callistemon viminalis 'Little John' — Dwarf Bottlebrush
- Olea europaea 'Little Ollie' — Little Ollie Olive
- Leptospermum scoparium 'Snow White' — New Zealand Tea Tree

Low Accent Shrubs - 1 gal.
- Dietes bicolor — Fortnight Lily
- Helichtotrichon sempervirens — Blue Oat Grass
- Loropetalum chinensis 'Suzanne' — Chinese Fringe Flower
- Pennisetum orientale — Dwarf Fountain Grass
- Pittosporum tobira 'Wheeleri' — Wheeler's Dwarf Tobira
- Rhaphiolepis indica 'Ballerina' — India Hawthorne
- Salvia species — Sage

Focal Accent Shrubs - 1 gal.and 5 gal. (for bid purposes - 50/50 1 gal/5 gal)
- Dietes bicolor — Fortnight Lily
- Dasylirion wheeleri — Desert Spoon
- Lantana species — Lantana
- Phormium species — Dwarf Flax
- Salvia species — Sage

This plan represents the design style and theme of the landscape design and planting. These plans are preliminary and may change through the design process. The final planting plan may not contain all of the above plants in the sizes as shown. Additionally some new plant species may be used in the final design. This plan does however indicate the quantity of trees and the overall level of landscape development that will be carried through with the final design.

Final landscape design shall meet Los Altos codes and requirements as well as Project Specific Conditions of Approval. Final design is subject to approval through the building permit review process.

NORTH
Scale: 1" = 20'-0"
0' 10' 20' 40'

Know what's below. Call before you dig.
Dial 811 or 800-227-2600

ARC TEC
ARCHITECTURAL TECHNOLOGIES
www.arctecinc.com
Arizona
2960 East Northern Avenue, Building C
Phoenix, AZ 85028 602.953.2355
California
1731 Technology Drive, Suite 750
San Jose, CA 95113 408.496.1121

The "user(s)" in possession of this documentation acknowledge(s) that ARC TEC's and ARC TEC consultants' drawings, specifications, reports, electronic data and other documentation are instruments of service. ARC TEC and ARC TEC consultants shall be deemed the author and owner of such documentation. The "user(s)" in possession of this documentation shall not sue or authorize any other person to use ARC TEC's or ARC TEC consultants' instruments of service. Reuse without ARC TEC's written authorization will be at the user(s) sole risk and without liability to ARC TEC and ARC TEC's consultants. The user(s) possessing this documentation shall indemnify and hold harmless ARC TEC and ARC TEC's consultants and agents and employees from and against all claims, damages losses and expenses, including but not limited to attorneys' fees, arising out of unauthorized reuse of ARC TEC or ARC TEC's consultants instruments of service.
Written dimensions on this drawing shall have precedence over any scaled dimension. DO NOT SCALE THIS DRAWING for accurate dimensions and notify ARC TEC of any discrepancies.
© Copyright ARC TEC, Inc. 2015

In Association with:
KLA
LANDSCAPE ARCHITECTURE PLANNING
151 N. Norlin St.
Sonora, CA 95370
(209)532-2856

An Architectural and Site Approval Application for:
LOS ALTOS GOLF AND COUNTRY CLUB
1560 Country Club Drive
Los Altos, California

Los Altos Golf and Country Club

DATE	DESCRIPTION
11.20.2018	COUNTY ASA SUBMITTAL
1 01.07.2019	COUNTY ASA RESUBMITTAL
2 02.19.2019	COUNTY ASA RESUBMITTAL

Preliminary Planting Plan

L0.2

PROJECT NO: 154085/KLA 16-1870

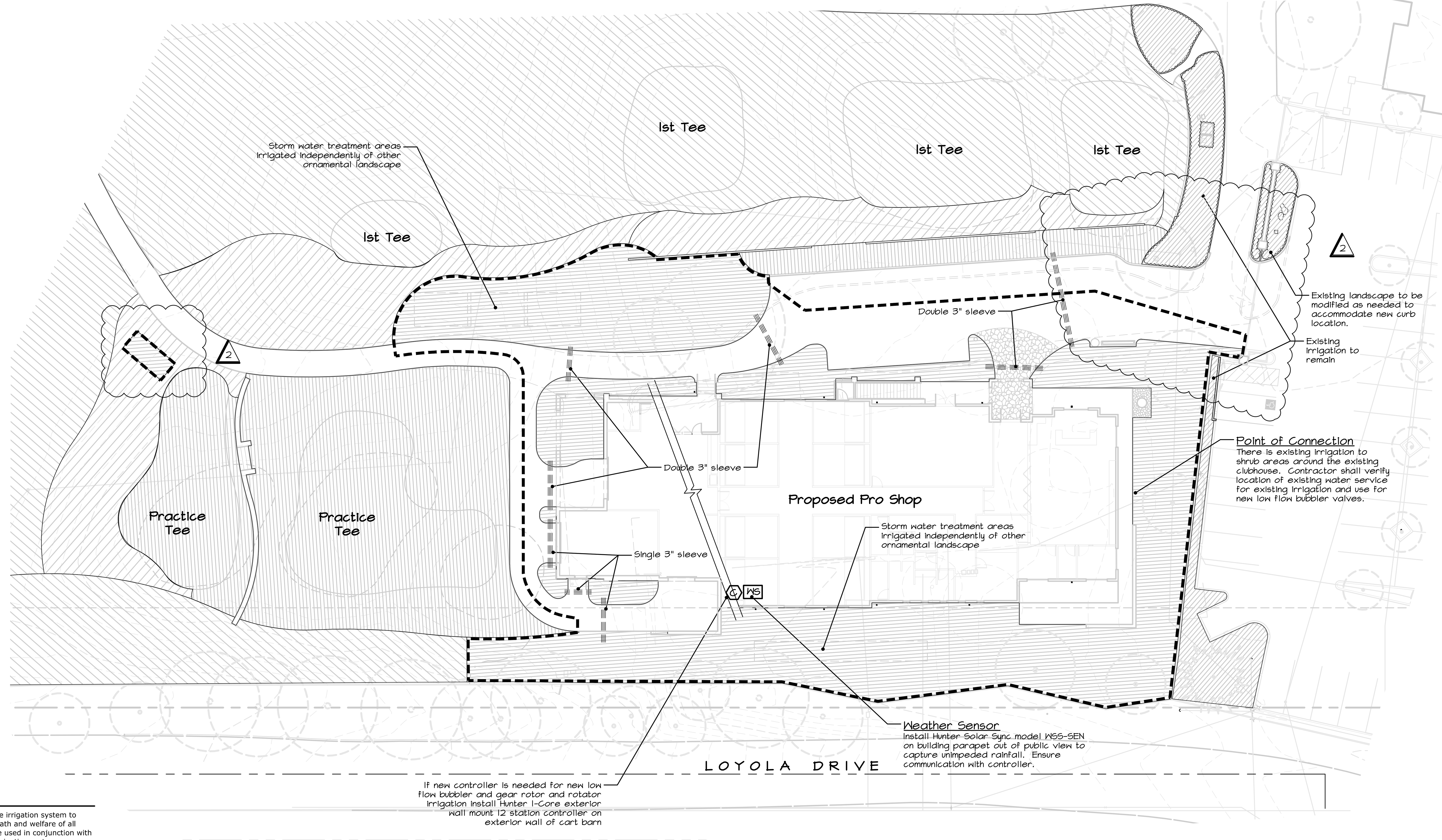

IRRIGATION DESIGN NOTES:

1. The contractor shall be responsible for the layout and installation of the irrigation system to meet the intent of these notes, plan, and legend, and to ensure the heath and welfare of all existing-to-remain and proposed plant material. These notes are to be used in conjunction with specific site conditions and general best practices to ensure a quality irrigation system.
2. The contractor shall carefully review the existing golf irrigation that is located near the proposed improvements. The contractor shall work with the golf superintendent to determine the best means for eliminating, moving, and adding golf irrigation heads to facilitate the addition of the proposed new clubhouse landscape elements while maintaining full coverage of the portion of the course that is not being impacted by the new construction. See also "Existing Irrigation Notes" this sheet.
3. All new golf heads or replacement heads shall match the existing and shall be installed per the manufacturer's specifications and per the direction of the golf superintendent and shall avoid over-spraying onto the non-golf irrigation and the proposed hardscape improvements.
4. There is existing irrigation around the existing clubhouse. The contractor shall determine the location of the existing water service for this small-scale irrigation and preserve the service for the proposed low-flow bubbler and gear rotor/rotator irrigation as shown on this plan. If service is not available, coordinate with golf superintendent for potential service location. Otherwise, the general contractor shall provide a 1-1/2" service from the building. Contractor shall provide the required backflow prevention device.
5. Spray heads to be selected , laid out, and adjusted to avoid any overspray onto hardscape or building surfaces. Spray heads to achieve head-to-head coverage with 20% overage.
6. Bubblers to be installed to each plant at the minimum quantity as listed in the legend. Bubblers to be placed on uphill side of plants and 3" - 6" from the trunk.
7. Lateral line piping to be Sch. 40 PVC at the appropriate size to ensure proper functioning of irrigation heads in relation to the available water pressure. Mainline to be Sch. 40 PVC.
8. Irrigation equipment to be installed per manufacturer's specifications.

EXISTING IRRIGATION NOTES:

1. The site is serviced by an existing irrigation system. The general contractor is to coordinate with the landscape contractor and the golf superintendent to review the site prior to any demolition taking place. The portion of the existing irrigation system that services existing-to-remail landscape is to remain operable throughout the construction process.
2. The golf superintendent is to be notified a minimum of 48 hours prior to any work or planned disruption of the existing golf irrigation system. The existing controller will need to be adjusted in order for work to take place on the system. All work is to be completed under the supervision of the superintendent.
3. Mainline and control wires that service irrigation that will be removed are to be cut and capped at the limit of demolition. Abandoned control wires are to be coiled and placed in a 9" round valve box directly adjacent to the capped mainline. Provide min. 10' of control wires coiled.
4. The landscape contractor is to review and determine the location of the existing-to-remain irrigation that travels through the construction zone. All irrigation that is to service landscape that is to remain is to remain fully operable throughout construction. The existing mainline and control wires are to be rerouted and placed in a new trench (min. 24" depth) around the construction zone or through a protected zone within the construction area. Splice control wires as needed - all splices to be located in a min. 6" round valve box and shall be approved by the golf superintendent.
5. Control wires through construction zone are to be placed in conduit for protection.
6. Location of the mainline is to be clearly marked on site. The general contractor shall be responsible for ensuring the protection of the existing-to-remain irrigation system. The general contractor will be responsible for making all repairs and replacing all existing plant material that is damaged due to any disruption of the irrigation system.
7. All irrigation heads, piping, valves, control wires, etc. that are located within the demolition zone are to be completely removed from site and disposed of at an approved disposal facility. Fees for disposal are to be included in the general contractor's scope of work.

IRRIGATION LEGEND

Symbol	Manufacturer	Description / Model No.
(valve symbol)	Rainbird	PEB Series Automatic Remote-Control Valve: or appoved equal
(drip valve symbol)	Rainbird	XCZ-PRB-100-COM for 1" drip valve kit and XCZ-PRB-150-COM for 1-1/2" drip valve kit - or approved equal
(quick coupler symbol)	Rainbird	33-DLRC Quick Coupler.
(gate valve symbol)	Nibco	T-113 Gate Valve: Line size.
C	Hunter	I-Core 18 Station Exterior Wall-Mount Controller; ICC-600-SS with quantity ICM-600 module as needed to meet quantity of stations as specified. Include WSS module for Solar-Sync.
SS	Hunter	Solar-Sync - model WSS-SEN; Install on wall of trash enclosure away from drip line of trees. Install per manufacturer's specifications. Controller and Solar-Sync to be installed with modules and receivers as needed for operation.
(heavy dashed line)	Approved	Schedule 40 PVC Pressurized Mainline: See Plan for size.
(thin line)	Approved	Schedule 40 PVC Lateral Line: See Plan for size.
(sleeve symbol)	Approved	Schedule 40 PVC Sleeve (two per location).

(horizontal hatch) New low flow bubbler with Sch. 40 PVC laterals and IPS flex pipe between laterals and shrub bubblers. Bubblers to be Toro LF20 PC and/or LF40 PC to each plant. Contractor shall monitor the water during the maintenance period and make modifications to bubblers (GPH) at each plant to ensure that all plants are getting adequate water based on specific microclimate conditions. Each plant to receive the following minimum number of bubblers:

4" and 1 Gallon shrubs	(1) Toro LF20-PC Bubbler (2.0 GPH/0.033 GPM)
5 Gallon shrubs	(1) Toro LF40-PC Bubbler (4.0 GPH/0.067 GPM)
15 Gallon shrubs	(2) Toro LF40-PC Bubbler (4.0 GPH/0.067 GPM)
36" Box Trees	(4) Toro LF40-PC Bubbler (4.0 GPH/0.067 GPM)

Bubblers to be spaced equally around plant.

(diagonal hatch) Existing golf course irrigation heads will need to be adjusted, moved, and altered based on the proposed site design alterations. Revisions to be reviewed and verified in the field with the golf course superintendent.

(vertical hatch) New irrigation will be required for the new turf areas proposed with this design. Contractor to provide for the installation of new gear rotor heads such as Rainbird 5000 Series MPR on 6" pop-ups and/or Rainbird Rotator nozzles such as R-VAN on 1806-SAM-PRS heads. Achieve head-to-head coverage with minimal overspray onto hardscape areas.

(dense diagonal hatch) Existing ornamental landscape irrigation to remain with no changes anticipated

(reverse diagonal hatch) Existing golf course irrigation to remain with no anticipated changes.

WELO Water Use Calculations

The perimeter of the new landscape area that is included with the WELO calcs is within the dashed line that is shown on the plans

The following calculations represent the intended hydrozones and water usage as designed with this Preliminary Landscape Plan. WELO calcs are based on the new landscape with new irrigation and this consists of the area directly around the new Pro Shop. There is existing lawn irrigation that will be adjusted to make room for the new Pro Shop landscape, but it is existing-to-remain and therefore not subject to the requirements of WELO. As we move through the design process we anticipate minor adjustments/revisions of these calculations. However, compliance with WELO code requirements will always remain.

ETo for Los Altos 43.0

HydroZone	Type of Plants	Water Use	Plant Factor	Hydrozone Area	%	Type of Irrigation	Irrigation Efficiency	ETWU
1	Medium water using shrubs	Medium	.5	2,975 sf	27.8%	Drip emitters	.81	56,473.6
2	Low water using shrubs	Low	.3	7,715 sf	72.2%	Drip Emitters	.81	87,871.0
TOTAL				10,690 sf				144,344.6 gallons

Maximum Applied Water Allowance (MAWA) 146,548.7 gallon/year

Estimated Total Water Usage (ETWU) 144,344.6 gallon/year

Average Irrigation Efficiency .81

ETWU is less than MAWA, therefore water usage as designed exceeds code requirements

BUBBLER LATERAL SIZING SCHEDULE

The contractor shall be responsible for collectively adding up the volume of water needed to service all bubblers on the system and insure proper lateral sizing for required flow for all pipe segments.

1/2" PVC Sch. 40	Up to 4.5 GPM
3/4" PVC Sch. 40	Up to 8.0 GPM
1" PVC Sch. 40	Up to 13.0 GPM
1-1/4" PVC Sch. 40	Up to 22.0 GPM
1-1/2" PVC Sch. 40	Above 22.0 GPM

Contractor responsible to install bubblers and laterals per best installation practices. All shrubs and trees to receive proper placement of bubblers and quantity per schedule listed in legend. Contractor to size Sch. 40 PVC lateral properly based on the flow of bubblers collectively added from the farthest point on the circuit per the lateral sizing schedule above. Contractor to insure proper flow from valve to all bubblers. If collective flow of a single circuit is greater than 20 GPM use 1-1/2" valve.

2

NORTH
Scale: 1" = 20'-0"
0' 10' 20' 40'

811 Know what's below. Call before you dig.
Dial 811 or 800-227-2600

ARC TEC
ARCHITECTURAL TECHNOLOGIES
www.arctecinc.com
Arizona
2960 East Northern Avenue, Building C
Phoenix, AZ 85028 602.953.2355
California
1731 Technology Drive, Suite 750
San Jose, CA 95113 408.496.1121

The "user(s)" in possession of this documentation acknowledge(s) that ARC TEC's and ARC TEC consultants' drawings, specifications, reports, electronic data and other documentation are instruments of service. ARC TEC and ARC TEC consultants shall be deemed the author and owner of such documentation. The "user(s)" in possession of this documentation shall not sue or authorize any other person to use ARC TEC's or ARC TEC consultants' instruments of service. Reuse without ARC TEC's written authorization will be at the user(s) sole risk and without liability to ARC TEC and ARC TEC's consultants. The user(s) possessing this documentation shall indemnify and hold harmless ARC TEC and ARC TEC's consultants and agents and employees from and against all claims, damages losses and expenses, including but not limited to attorneys' fees, arising out of unauthorized reuse of ARC TEC or ARC TEC's consultants instruments of service.
Written dimensions on this drawing shall have precedence over any scaled dimension. DO NOT SCALE THIS DRAWING for accurate dimensions and notify ARC TEC of any discrepancies.
© Copyright ARC TEC, Inc. 2015

In Association with:
KLA
LANDSCAPE ARCHITECTURE PLANNING
151 N. Norlin St.
Sonora, CA 95370
(209)532-2856

An Architectural and Site Approval Application for:
LOS ALTOS GOLF AND COUNTRY CLUB
1560 Country Club Drive
Los Altos, California

Los Altos Golf and Country Club

DATE	DESCRIPTION
11.20.2018	COUNTY ASA SUBMITTAL
1 01.07.2019	COUNTY ASA RESUBMITTAL
2 02.19.2019	COUNTY ASA RESUBMITTAL

Preliminary Irrigation Plan

L0.3

PROJECT NO: 154085/KLA 16-1870

C:\Users\Sam\appdata\local\temp\AcPublish_10416\Pre1870R93.dwg - Feb 18, 2019, 8:36am - Sam

C:\USERS\SAM\APPDATA\LOCAL\TEMP\ACPUBLISH_10416\PRE1870R93.DWG (02-18-19 8:36:05AM) Plotted by: Sam

Attachment E

CURRENT LOYOLA DRIVE ELEVATION
BEFORE

PROPOSED LOYOLA DRIVE ELEVATION
AFTER

ARC TEC

A PRELIMINARY DESIGN CONCEPT FOR
LOS ALTOS GOLF and COUNTRY CLUB
LOS ALTOS, CALIFORNIA

DATE: 02.12.19

ELEVATION

PROJECT #: 154085